aiwa SERVICE

NSX-AJ24 U
NSX-BL23 LH
NSX-BL24 LH, HS
NSX-BL34 LH
NSX-BL24E HA
NSX-BL34E HA

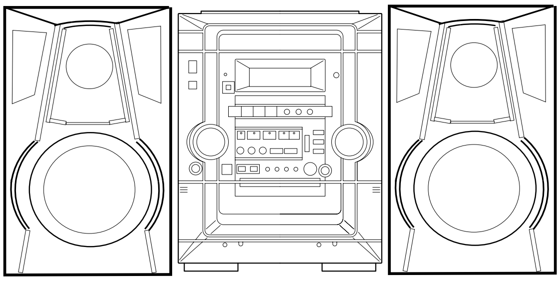

SERVICE MANUAL

COMPACT DISC STEREO SYSTEM

BASIC TAPE MECHANISM : ZZM-3
BASIC CD MECHANISM : AZG-1

• This Service Manual is the "Revision Publishing" and replaces "Simple Manual".

NSX-AJ24 <U> / BL24 <LH>	(S/M Code No. 09-003-426-1T1)
NSX-BL23 <LH> / BL34 <LH>	(S/M Code No. 09-004-426-1T4)
NSX-BL24 <HS>	(S/M Code No. 09-004-426-1T5)

• If requiring information about the CD mechanism, see Service Manual of AZG-1.

AZG-1 ZD8RDC	(S/M Code No. 09-001-335-3NA)
AZG-1 YZD8RDM	(S/M Code No. 09-001-335-3N6)
AZG-1 ZD4RDC	(S/M Code No. 09-001-335-3N8)

REVISION DATA

aiwa

S/M Code No. 09-005-426-1R1

SYSTEM COMBINATION TABLE

<table>
<tr><th>SYSTEM</th><th>CD
CASSEIVER</th><th>SPEAKER</th><th>TAPE
MECHANISM</th><th>CD
MECHANISM</th><th>REMOTE
CONTROLLER</th></tr>
<tr><td>NSX–AJ24</td><td>CX–NAJ24</td><td>SX–NAJ25
SX–R140</td><td>ZZM–3 YPR1NC</td><td>AZG–1 ZD8RDC</td><td rowspan="6">RC–ZAS02</td></tr>
<tr><td>NSX–BL23</td><td>CX–NBL23</td><td rowspan="2">SX–NBL25</td><td>ZZM–3 YPR1NM</td><td>AZG–1 YZD8RDM</td></tr>
<tr><td>NSX–BL24</td><td>CX–NBL24</td><td rowspan="4">ZZM–3 YPR1NC</td><td rowspan="2">AZG–1 ZD8RDC</td></tr>
<tr><td>NSX–BL34</td><td>CX–NBL34</td><td>SX–NBL42</td></tr>
<tr><td>NSX–BL24E</td><td>CX–NBL24E</td><td>SX–NBL25</td><td rowspan="2">AZG–1 ZD4RDC</td></tr>
<tr><td>NSX–BL34E</td><td>CX–NBL34E</td><td>SX–NBL42</td></tr>
</table>

SPECIFICATIONS

Main unit

<FM Tuner section>

Tuning range	87.5 MHz to 108 MHz
Usable sensitivity (IHF)	13.2 dBf
Antenna terminals	75 ohms (unbalanced)

<AM Tuner section>

Tuning range	530 kHz to 1710 kHz (10 kHz step) 531 kHz to 1602 kHz (9 kHz step)
Usable sensitivity	350 µV/m
Antenna	Loop antenna

<Amplifier section>

CX-NAJ24 <U>:

Power output	50 W + 50 W (50 Hz – 20 kHz, T.H.D. less than 1 %, 6 ohms) 62 W + 62 W (1 kHz, T.H.D. less than 10 %, 6 ohms)
Total harmonic distortion	0.08 % (25 W, 1 kHz, 6 ohms, DIN AUDIO)

CX-NBL23/CX-NBL24 <LH>, CX-NBL24E <HA>:

Power output	Rated: 40 W + 40 W (6 ohms, T.H.D. 1 %, 1 kHz) Reference: 50 W + 50 W (6 ohms, T.H.D. 10 %, 1 kHz).
Total harmonic distortion	0.05 % (25 W, 1 kHz, 6 ohms, DIN AUDIO)

CX-NBL34 <LH>, CX-NBL34E <HA>:

Power output	Rated: 65 W + 65 W (6 ohms, T.H.D. 1 %, 1 kHz) Reference: 80 W + 80 W (6 ohms, T.H.D. 10 %, 1 kHz).
Total harmonic distortion	0.05 % (40 W, 1 kHz, 6 ohms, DIN AUDIO)

CX-NBL24 <HS>:

Power output	Rated: 24 W + 24 W (6 ohms, T.H.D. 1 %, 1 kHz) Reference: 30 W + 30 W (6 ohms, T.H.D. 10 %, 1 kHz).
Total harmonic distortion	0.08 % (15 W, 1 kHz, 6 ohms, DIN AUDIO)
Inputs	VIDEO/AUX: 500 mV
Outputs	SPEAKERS: accepts speakers of 6 ohms or more SURROUND SPEAKERS **<U only>** : accepts speakers of 8 ohms to 16 ohms PHONES (stereo jack): accepts headphones of 32 ohms or more

<Cassette deck section>

Track format	4 tracks, 2 channels stereo
Frequency response	50 Hz – 15 kHz
Recording system	AC bias
Heads	DECK 1: Playback head x 1 DECK 2: Recording/playback head x 1, erase head x 1

<Compact disc player section>

Laser	Semiconductor laser (λ =780 nm)
D/A converter	1 bit dual
Signal-to-noise ratio	85 dB (1 kHz, 0 dB)
Harmonic distortion	0.05 % (1 kHz, 0 dB)

<General>

Power requirements	**U:** 120 V AC, 60 Hz **HS:** 220 V AC, 60 Hz **LH, HA:** 120 V/220 – 230 V/240 V AC Switchable, 50/60 Hz

CX-NAJ24 <U>:

Power consumption	75 W
Power consumption in standby mode	13 W with power-economizing mode off 0.9 W with power-economizing mode on
Dimensions (W x H x D)	260 x 328 x 329 mm ($10\frac{1}{4}$ x 13 x 13 in.)
Weight	6.4 kg (14 lbs 2 oz.)

CX-NBL23/CX-NBL24 <LH>, CX-NBL24E <HA>:

Power consumption	80 W
Power consumption in standby mode	13 W with power-economizing mode off 0.9 W with power-economizing mode on
Dimensions (W x H x D)	260 x 328 x 329 mm
Weight	6.3 kg

CX-NBL34 <LH>, CX-NBL34E <HA>:

Power consumption	125 W
Power consumption in standby mode	17 W with power-economizing mode off 0.9 W with power-economizing mode on
Dimensions (W x H x D)	260 x 328 x 329 mm
Weight	7.1 kg

CX-NBL24 <HS>:

Power consumption	70 W
Power consumption in standby mode	13 W with power-economizing mode off 0.9 W with power-economizing mode on
Dimensions (W x H x D)	260 x 328 x 329 mm
Weight	6.3 kg

Speaker system SX-NAJ25 <NSX-AJ24>
Speaker system SX-NBL25 <NSX-BL23/BL24/BL24E>
Speaker system SX-NBL42 <NSX-BL34/BL34E>

Speaker system	3 way, bass reflex (magnetic shield type)
Speaker units	Woofer: 140 mm ($5\frac{5}{8}$ in.) cone type Tweeter: 60 mm ($2\frac{3}{8}$ in.) cone type Super tweeter: 20 mm ($\frac{13}{16}$ in.) ceramic type
Impedance	6 ohms
Sensitivity	87 dB/W/m
Dimensions (W x H x D)	**SX-NAJ25/SX-NBL25:** 202 x 324 x 219 mm (8 x $12\frac{7}{8}$ x $8\frac{5}{8}$ in.) **SX-NBL42:** 220 x 324 x 230 mm
Weight	**SX-NAJ25/SX-NBL25:** 3.8 kg (8 lbs 6 oz.) **SX-NBL42**: 4.0 kg

• Design and specifications are subject to change without notice.

• The word "BBE"and the "BBE symbol" are trademarks of BBE Sound, Inc.
Under license from BBE Sound,Inc.

PROTECTION OF EYES FROM LASER BEAM DURING SERVICING

This set employs laser. Therefore, be sure to follow carefully the instructions below when servicing.

WARNING!!

WHEN SERVICING, DO NOT APPROACH THE LASER EXIT WITH THE EYE TOO CLOSELY. IN CASE IT IS NECESSARY TO CONFIRM LASER BEAM EMISSION. BE SURE TO OBSERVE FROM A DISTANCE OF MORE THAN 30cm FROM THE SURFACE OF THE OBJECTIVE LENS ON THE OPTICAL PICK-UP BLOCK.

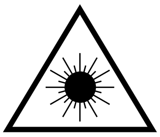

- Caution: Invisible laser radiation when open and interlocks defeated avoid exposure to beam.
- Advarsel: Usynlig laserståling ved åbning, når sikkerhedsafbrydere er ude af funktion. Undgå udsættelse for stråling.

VAROITUS!

Laiteen Käyttäminen muulla kuin tässä käyttöohjeessa mainitulla tavalla saataa altistaa käyt-täjän turvallisuusluokan 1 ylittävälle näkymättömälle lasersäteilylle.

VARNING!

Om apparaten används på annat sätt än vad som specificeras i denna bruksanvising, kan användaren utsättas för osynling laserstrålning, som överskrider gränsen för laserklass 1.

CAUTION

Use of controls or adjustments or performance of procedures other than those specified herin may result in hazardous radiation exposure.

ATTENTION

L’utillisation de commandes, réglages ou procédures autres que ceux spécifiés peut entraîner une dangereuse exposition aux radiations.

ADVARSEL

Usynlig laserståling ved åbning, når sikkerhedsafbrydereer ude af funktion. Undgå udsættelse for stråling.

This Compact Disc player is classified as a CLASS 1 LASER product.
The CLASS 1 LASER PRODUCT label is located on the rear exterior.

CLASS 1	LASER PRODUCT
KLASSE 1	LASER PRODUKT
LUOKAN 1	LASER LAITE
KLASS 1	LASER APPARAT

Precaution to replace Optical block

(KSS – 213F)
(KSM – 880CAB)

Body or clothes electrostatic potential could ruin laser diode in the optical block. Be sure ground body and workbench, and use care the clothes do not touch the diode.

1) After the connection, remove solder shown in the right figure.

(KSS – 213F)
PICKUP Assy P.C.B.

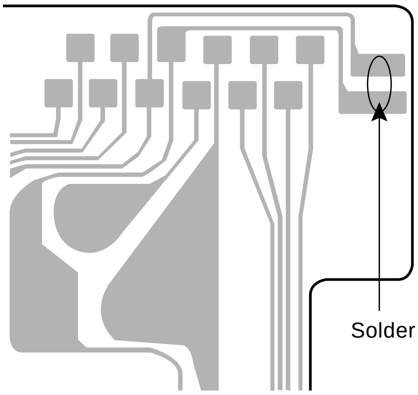

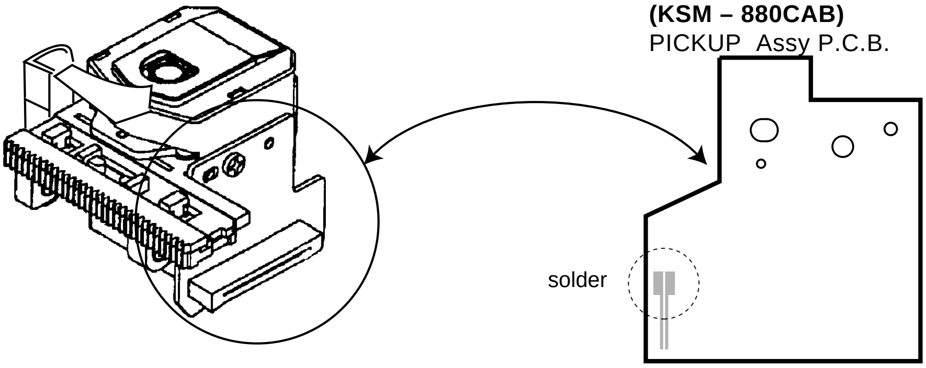

NOTE ON BEFORE STARTING REPAIR

1. Forced discharge of electrolytic capacitor of power supply block

When repair is going to be attempted in the set that uses relay circuit in the power supply block, electric potential is kept charged across the electrolytic capacitors (C101, 102) even though AC power cord is removed. If repair is attempted in this condition, secondary defect can occur.

In order to prevent the secondary trouble, perform the following measures before starting repair work.

Discharge procedure

① Remove the AC power cord.
② Connect a discharging resistor at an end of lead wire that has clips at both ends. Connect the other end of the lead wire to metal chassis.
③ Contact the other end of the discharging resistor to the positive (+) side (+VH) of C101. (For two seconds)
④ Contact the same end of the discharging resistor as step ③ to the negative (-) side (-VH) of C102 in the same way. (For two seconds)
⑤ Check that voltage across C101 and C102 has decreased to 1 V or less using a multimeter or an oscilloscope.

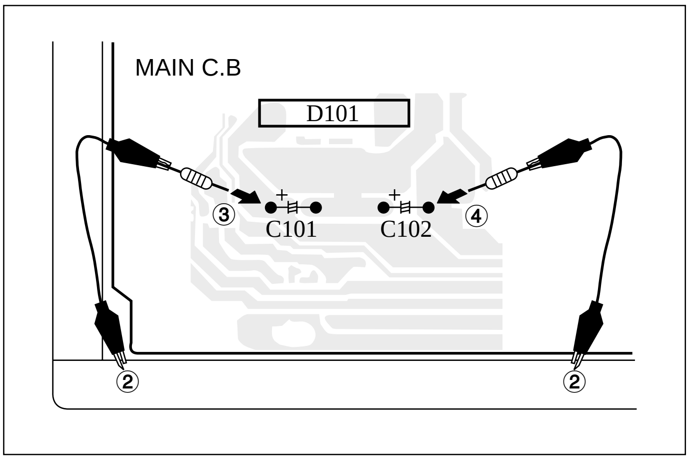

Fig-1

Select a discharging resistor referring to the following table.

Charging voltage (V) (C101, 102)	Discharging resistor (Ω)	Rated power (W)	Parts number
25-48	100	3	87-A00-247-090
49-140	220	5	87-A00-232-090

Note: The reference numbers (C101, C102) of the electrolytic capacitors can change depending on the models. Be sure to check the reference numbers of the charging capacitors on schematic diagram before starting the discharging work.

2. Check items before exchanging the MICROCOMPUTER

Be sure to check the following items before exchanging the MICROCOMPUTER. Exchange the MICROCOMPUTER after confirming that the MICROCOMPUTER is surely defective.

2-1. Regarding the HOLD terminal of the MICROCOMPUTER

When the HOLD terminal (INPUT) of the MICROCOMPUTER is “H”, the MICROCOMPUTER is judged to be operating correctly. When this terminal is “L”, the main power cannot be turned on. Therefore, be sure to check the terminal voltage of the HOLD terminal before exchange.

When the MICROCOMPUTER is not defective, the HOLD terminal can also go “L” when the POWER AMPLIFIER has any abnormalities that triggers the abnormality detection circuit on the MAIN C. B. that sets the HOLD terminal to “L”.

- Good or no good judgement of the MICROCOMPUTER

① Turn on the AC main power.
② Confirm that the main power is turned on and the HOLD terminal of the MICROCOMPUTER keeps the “H” level or not.
③ When the HOLD terminal is “L” level, the abnormality detection circuit is judged to be working correctly and the MICROCOMPUTER is judged to be good.

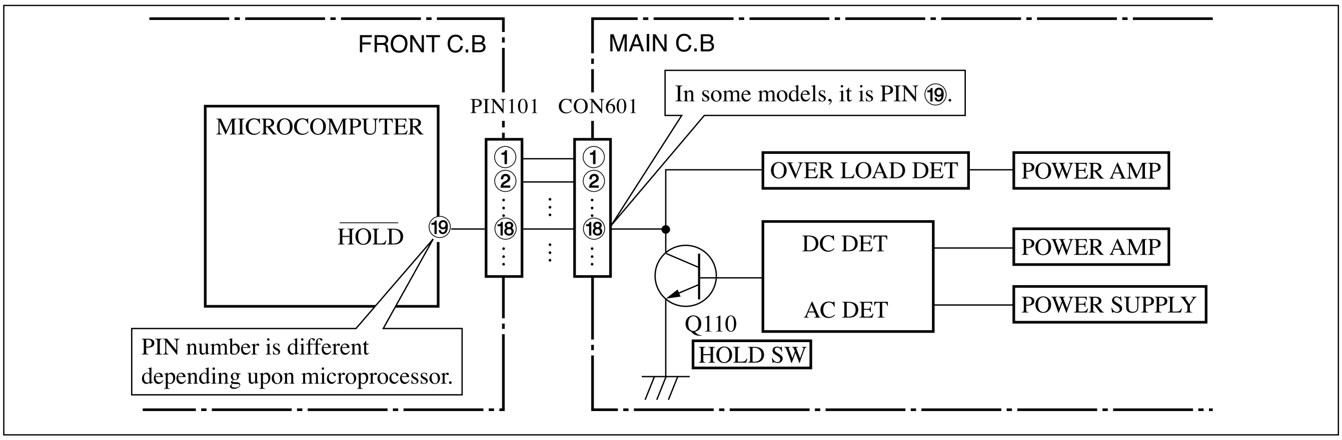

Fig-2-1

In such a case, check also if the POWER AMPLIFIER circuit or power supply circuit has any abnormalities or not.

2-2. Regarding reset

There are cases that the machine does not work correctly because the MICROCOMPUTER is not reset even though the AC power cord is re-inserted, or the software reset (pressing the STOP key + POWER key) is performed.
When the above described phenomenon occurs, it can lead to wrong judgement as if the MICROCOMPUTER is defective and to exchange the MICROCOMPUTER. In such a case, perform the forced-reset by the following procedure and check good or no good of the MICROCOMPUTER.

① Remove the AC power cord.

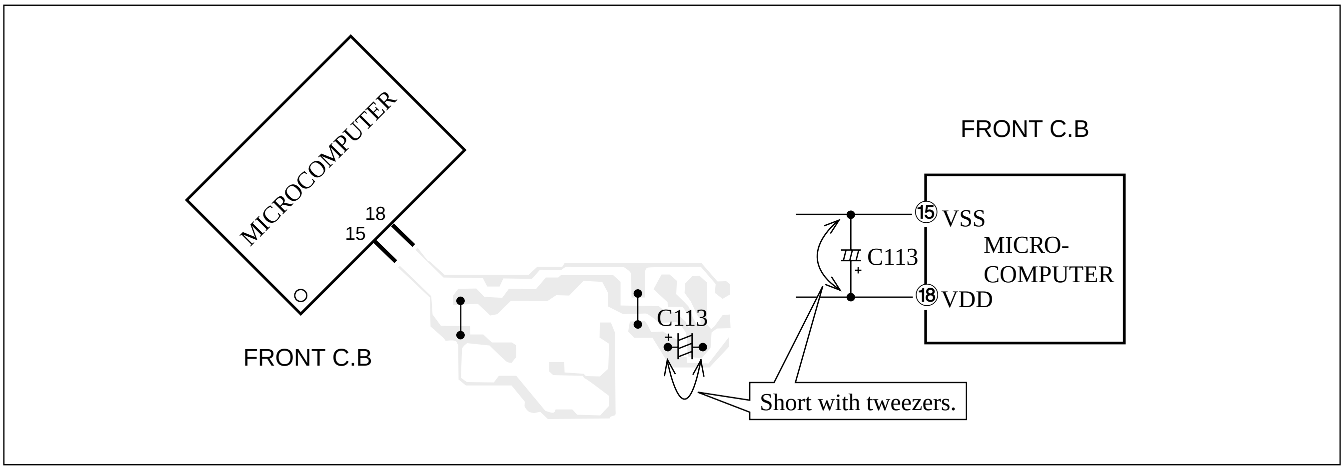

Fig-2-2

② Short both ends of the electrolytic capacitor C113 that is connected to VDD of the MICROCOMPUTER with tweezers.

③ Connect the AC power cord again. If the MICROCOMPUTER returns to the normal operation, the MICROCOMPUTER is good.

Note: The reference number or MICROCOMPUTER pin number of transistor (Q110) and electrolytic capacitor (C113) can change depending on the models. Be sure to check the reference numbers on schematic diagram before starting the discharging work.

2-3. Confirmation of soldering state of MICROCOMPUTER

Check the soldering state of the MICROCOMPUTER in addition to the above described procedures. Be sure to exchange the MICROCOMPUTER after surely confirming that the trouble is not caused by poor soldering but the MICROCOMPUTER itself.

ELECTRICAL MAIN PARTS LIST

REF. NO.	PART NO.	KANRI NO.	DESCRIPTION
IC			
	87-A21-269-010		IC,EW732
	87-A21-396-010		IC,STK490-040<24HS>
	87-A21-398-010		IC,STK490-110<EXCEPT 24HS>
	87-A21-419-040		C-IC,NJM14558MD-TE2
	87-A21-401-040		C-IC,M61503FP
	87-A21-415-010		IC,LA1843<24LH,24U>
	87-A21-560-010		IC,LA1844L-A<EXCEPT 24LH,24U>
	8A-NF9-601-110		C-IC,UPD780226GF-014-3BA
	87-A21-482-010		IC,RPM6938-H4
	87-070-127-110		IC,LC72131D
TRANSISTOR			
	87-026-609-080		TR,KTA1266GR
	89-213-702-010		TR,2SB1370E
	87-026-610-080		TR,KTC3198GR
	87-A30-076-080		C-TR,2SC3052F
	87-A30-075-080		C-TR,2SA1235F
	87-A30-484-080		C-TR,KRA102S<24LH>
	87-A30-074-080		C-TR,RT1P141C<EXCEPT 24LH>
	87-A30-468-080		C-TR,KRC102S-RTK
	87-A30-107-070		C-TR,CMBT5401
	87-A30-106-040		C-TR,CMBT5551
	87-026-235-080		C-TR,DTC114EK<24U>
	87-026-245-080		TR,DTC114ES<EXCEPT 24U>
	87-A30-087-080		C-FET,2SK2158
	87-A30-091-080		FET,2SJ460
	87-A30-090-080		FET,2SK2541
	87-A30-062-080		C-TR,KRC104S
	87-A30-318-080		TR,CSA952K
	89-333-317-880		TR,2SC3331(T/U)
	87-A30-329-080		TR,CD1585BC
	89-327-143-080		C-TR,2SC2714O<EXCEPT 24LH,24U>
	87-A30-072-080		C-TR,RT1P144C
	87-A30-234-080		TR,CSC4115BC
	87-A30-198-080		TR,KTC3199GR<EXCEPT 24U>
DIODE			
	87-A40-736-080		DIODE,1N4148M(SEM)<24LH>
	87-A40-393-090		DIODE,1N5402 GW(F20)<24U>
	87-020-465-080		DIODE,1SS133<EXCEPT 24LH>
	87-A40-455-090		DIODE,RL203 GW<EXCEPT 24HS>
	87-A40-535-080		DIODE,1N5393<EXCEPT 24U,34LH,34EHA>
	87-A40-553-080		DIODE,1N4003 LES
	87-A40-776-080		ZENER,UZ27BSD
	87-A40-764-080		ZENER,UZ10BSC
	87-A40-313-080		C-DIODE,MC2840
	87-A40-270-080		C-DIODE,MC2838
	87-A40-269-080		C-DIODE,MC2836
	87-A40-854-080		ZENER,UZ15BSA
	87-A40-752-080		ZENER,UZ6.2BSC
	87-A40-739-080		ZENER,UZ2.7BSA
	87-017-149-080		ZENER,HZS6A2L
MAIN C.B			
C3	87-012-368-080		C-CAP,S 0.1-50 F
C4	87-012-368-080		C-CAP,S 0.1-50 F
C5	87-012-368-080		C-CAP,S 0.1-50 F
C6	87-012-368-080		C-CAP,S 0.1-50 F
C9	87-012-368-080		C-CAP,S 0.1-50 F
C10	87-012-368-080		C-CAP,S 0.1-50 F
C11	87-012-368-080		C-CAP,S 0.1-50 F
C12	87-012-368-080		C-CAP,S 0.1-50 F
C19	87-A12-193-090		CAP,E 2200-50 M 85 SAMXON<24HS>
C19	87-A12-036-000		CAP,E 2200-63 M SMG<EXCEPT 24HS>
C20	87-A12-193-090		CAP,E 2200-50 M 85 SAMXON<24HS>
C20	87-A12-036-000		CAP,E 2200-63 M SMG<EXCEPT 24HS>
C21	87-016-495-000		CAP,E 3300-25 M SMG<24U>
C21	87-A12-183-090		CAP,E 3300-25 M 85<24HS>
C21	87-A10-520-000		CAP,E 3300-35 M SMG<23LH,24LH>
C21	87-A12-182-090		CAP,E 3300-35 M85<24EHA,34LH,34EHA>
C22	87-016-495-000		CAP,E 3300-25 M SMG<24U>
C22	87-A12-183-090		CAP,E 3300-25 M 85<24HS>
C22	87-A10-520-000		CAP,E 3300-35 M SMG<23LH,24LH>
C22	87-A12-182-090		CAP,E 3300-35 M85<24EHA,34LH,34EHA>
C25	87-010-385-080		CAP,ELECT 220-25V
C26	87-010-247-080		CAP,ELECT 100-50V
C30	87-010-430-080		CAP,ELECT 100-63
C31	87-010-263-080		CAP,ELECT 100-10V
C32	87-010-197-080		CAP,CHIP 0.01 DM
C33	87-010-263-080		CAP,ELECT 100-10V<24U>
C34	87-010-247-080		CAP,ELECT 100-50V
C35	87-010-380-080		CAP,ELECT 47-16V
C36	87-010-381-080		CAP,ELECT 330-16V
C38	87-010-197-080		CAP,CHIP 0.01 DM
C60	87-010-403-080		CAP,ELECT 3.3-50V
C61	87-010-260-080		CAP,ELECT 47-25V
C97	87-010-196-080		CHIP CAPACITOR,0.1-25
C101	87-010-185-080		C-CAP,S 3900P-50 B
C102	87-010-185-080		C-CAP,S 3900P-50 B
C103	87-010-545-080		CAP,ELECT 0.22-50V
C104	87-010-545-080		CAP,ELECT 0.22-50V
C105	87-010-187-080		CAP,CHIP S5600P
C106	87-010-187-080		CAP,CHIP S5600P
C107	87-010-404-080		CAP,ELECT 4.7-50V
C108	87-010-404-080		CAP,ELECT 4.7-50V
C109	87-010-179-080		C-CAP,S 1200P-50K<23LH,24EHA,34EHA>
C110	87-010-179-080		C-CAP,S 1200P-50K<23LH,24EHA,34EHA>
C111	87-010-391-080		CAP,E 10-35 SME
C112	87-010-391-080		CAP,E 10-35 SME
C113	87-010-405-080		CAP,E 10-50<23LH,24LH,24HS,24EHA>
C113	87-010-866-080		CAP,E 10-63 M VX<24U,34LH,34EHA>
C114	87-010-405-080		CAP,E 10-50<23LH,24LH,24HS,24EHA>
C114	87-010-866-080		CAP,E 10-63 M VX<24U,34LH,34EHA>
C119	87-012-369-080		C-CAP,S 0.047-50 ZF<24U>
C119	87-010-197-080		CAP,CHIP 0.01<23LH,24LH,24HS,24EHA>
C119	87-016-369-080		C-CAP,S 0.033-25 KB GRM<34LH,34EHA>
C120	87-012-369-080		C-CAP,S 0.047-50 ZF<24U>
C120	87-010-197-080		CAP,CHIP 0.01<23LH,24LH,24HS,24EHA>
C120	87-016-369-080		C-CAP,S 0.033-25 KB GRM<34LH,34EHA>
C125	87-012-368-080		C-CAP,S 0.1-50 F
C126	87-012-368-080		C-CAP,S 0.1-50 F
C127	87-012-368-080		C-CAP,S 0.1-50 F
C128	87-012-368-080		C-CAP,S 0.1-50 F
C129	87-010-191-080		C-CAP,S 0.015-50 F
C130	87-010-191-080		C-CAP,S 0.015-50 F
C131	87-010-197-080		CAP,CHIP 0.01 DM
C132	87-010-197-080		CAP,CHIP 0.01 DM
C133	87-010-186-080		CAP,CHIP 4700P
C140	87-010-182-080		C-CAP,S 2200P-50 B
C141	87-010-196-080		CHIP CAPACITOR,0.1-25
C235	87-010-408-080		CAP,ELECT 47-50V<24U>
C236	87-010-408-080		CAP,ELECT 47-50V<24U>
C239	87-010-196-080		CHIP CAPACITOR,0.1-25
C301	87-010-178-080		CHIP CAP,1000P
C302	87-010-178-080		CHIP CAP,1000P
C303	87-010-178-080		CHIP CAP,1000P
C304	87-010-178-080		CHIP CAP,1000P
C305	87-010-198-080		C-CAP,S 0.022-25 KB<34LH,34EHA>
C307	87-010-263-080		CAP,ELECT 100-10V
C308	87-010-263-080		CAP,ELECT 100-10V
C309	87-010-318-080		C-CAP,S 47P-50 CH
C310	87-010-318-080		C-CAP,S 47P-50 CH
C313	87-010-188-080		CAP,CHIP 6800P
C314	87-010-188-080		CAP,CHIP 6800P
C315	87-010-263-080		CAP,ELECT 100-10V
C317	87-010-546-080		CAP,ELECT 0.33-50V

REF. NO.	PART NO.	KANRI NO.	DESCRIPTION
C318	87-010-546-080		CAP,ELECT 0.33-50V
C326	87-010-198-080		CAP,CHIP 0.022
C327	87-012-368-080		C-CAP,S 0.1-50 F
C360	87-010-401-080		CAP,ELECT 1-50V
C399	87-012-140-080		CAP,470P
C401	87-010-544-080		CAP,ELECT 0.1-50V
C402	87-010-544-080		CAP,ELECT 0.1-50V
C403	87-010-321-080		CHIP CAPACITOR,82P(J)
C404	87-010-321-080		CHIP CAPACITOR,82P(J)
C405	87-010-197-080		CAP,CHIP 0.01 DM
C406	87-010-197-080		CAP,CHIP 0.01 DM
C407	87-010-197-080		CAP,CHIP 0.01 DM
C408	87-010-197-080		CAP,CHIP 0.01 DM
C409	87-010-182-080		C-CAP,S 2200P-50 B
C410	87-010-182-080		C-CAP,S 2200P-50 B
C411	87-010-405-080		CAP,ELECT 10-50V
C412	87-010-405-080		CAP,ELECT 10-50V
C452	87-010-382-080		CAP,ELECT 22-25V
C453	87-010-183-080		C-CAP,S 2700P-50 B
C454	87-010-183-080		C-CAP,S 2700P-50 B
C455	87-010-183-080		C-CAP,S 2700P-50 B
C456	87-010-197-080		CAP,CHIP 0.01 DM
C460	87-010-196-080		CHIP CAPACITOR,0.1-25
C461	87-012-158-080		C-CAP,S 390P-50 CH
C462	87-012-158-080		C-CAP,S 390P-50 CH
C605	87-010-184-080		C-CAP,S 3300P-50 KB<24U,34LH,34EHA>
C605	87-010-179-080		C-CAP,S 1200P<23LH,24LH,24HS,24EHA>
C606	87-010-184-080		C-CAP,S 3300P-50 KB<24U,34LH,34EHA>
C606	87-010-179-080		C-CAP,S 1200P<23LH,24LH,24HS,24EHA>
C609	87-010-213-080		C-CAP,S 0.015-25 B
C610	87-010-213-080		C-CAP,S 0.015-25 B
C611	87-010-545-080		CAP,ELECT 0.22-50V
C612	87-010-545-080		CAP,ELECT 0.22-50V
C613	87-010-545-080		CAP,ELECT 0.22-50V
C614	87-010-545-080		CAP,ELECT 0.22-50V
C615	87-010-154-080		CAP,CHIP 10P
C616	87-010-221-080		CAP,ELECT 470-10V
C617	87-010-221-080		CAP,ELECT 470-10V
C618	87-010-405-080		CAP,ELECT 10-50V
C630	87-016-669-080		C-CAP,S 0.1-25 K B
C631	87-010-185-080		C-CAP,S 3900P-50 B
C632	87-010-185-080		C-CAP,S 3900P-50 B
C633	87-016-369-080		C-CAP,S 0.033-25 B K
C634	87-016-369-080		C-CAP,S 0.033-25 B K
C669	87-010-322-080		C-CAP,S 100P-50 CH
C670	87-010-322-080		C-CAP,S 100P-50 CH
C671	87-010-196-080		CHIP CAPACITOR,0.1-25<24HS>
C672	87-010-196-080		CHIP CAPACITOR,0.1-25<24HS>
C673	87-010-182-080		C-CAP,S 2200P-50KB<24HS>
C677	87-010-197-080		CAP,CHIP 0.01 DM
C771	87-010-263-080		CAP,ELECT 100-10V
C772	87-010-197-080		CAP,CHIP 0.01 DM
C782	87-010-197-080		CAP,CHIP 0.01 DM
C783	87-010-197-080		CAP,CHIP 0.01 DM
C784	87-010-197-080		CAP,CHIP 0.01 DM
C785	87-010-197-080		CAP,CHIP 0.01 DM
C786	87-010-197-080		CAP,CHIP 0.01 DM
C788	87-010-149-080		C-CAP,S 5P-50 CH
C789	87-A10-801-080		C-CAP,S 0.022-16 JB CM<24HS>
C789	87-A12-052-080		C-CAP,S 0.033-25 JB<EXCEPT 24HS>
C790	87-A10-801-080		C-CAP,S 0.022-16 JB CM<24HS>
C790	87-A12-052-080		C-CAP,S 0.033-25 JB<EXCEPT 24HS>
C791	87-010-196-080		CHIP CAPACITOR,0.1-25
C792	87-010-197-080		CAP,CHIP 0.01 DM
C793	87-010-404-080		CAP,ELECT 4.7-50V
C795	87-010-197-080		CAP,CHIP 0.01 DM
C796	87-010-197-080		CAP,CHIP 0.01 DM
C797	87-010-405-080		CAP,ELECT 10-50V
C798	87-010-197-080		CAP,CHIP 0.01 DM
C799	87-010-407-080		CAP,ELECT 33-50V

REF. NO.	PART NO.	KANRI NO.	DESCRIPTION
C800	87-012-369-080		C-CAP,S 0.047-50F
C801	87-010-403-080		CAP,ELECT 3.3-50V
C802	87-010-194-080		CAP,CHIP 0.047
C803	87-010-198-080		CAP,CHIP 0.022
C804	87-010-263-080		CAP,ELECT 100-10V
C807	87-010-400-080		CAP,ELECT 0.47-50V
C808	87-010-401-080		CAP,ELECT 1-50V
C809	87-010-401-080		CAP,ELECT 1-50V
C810	87-010-196-080		CHIP CAPACITOR,0.1-25
C814	87-010-197-080		CAP,CHIP 0.01 DM
C815	87-010-400-080		CAP,ELECT 0.47-50V
C816	87-010-400-080		CAP,ELECT 0.47-50V
C821	87-010-405-080		CAP,ELECT 10-50V
C823	87-010-177-080		C-CAP,S 820P-50 J SL
C824	87-010-405-080		CAP,ELECT 10-50V
C825	87-010-596-080		CAP,S 0.047-16
C842	87-010-197-080		CAP,CHIP 0.01 DM
C844	87-010-197-080		CAP,CHIP 0.01 DM
C850	87-010-260-080		CAP,ELECT 47-25V
C851	87-010-197-080		CAP,CHIP 0.01 DM
C852	87-010-197-080		CAP,CHIP 0.01 DM
C853	87-010-197-080		CAP,CHIP 0.01 DM
C858	87-010-196-080		CHIP CAPACITOR,0.1-25
C859	87-010-196-080		CHIP CAPACITOR,0.1-25
C860	87-010-197-080		CAP,CHIP 0.01 DM
C959	87-010-196-080		CHIP CAPACITOR,0.1-25
C960	87-010-196-080		CHIP CAPACITOR,0.1-25
C961	87-010-152-080		C-CAP,S 8P-50 D CH GRM
C963	87-015-785-080		CHIP CAPACITOR,0.1FZ-25Z
C971	87-010-381-080		CAP,ELECT 330-16V
C972	87-010-404-080		CAP,ELECT 4.7-50V
C973	87-010-197-080		CAP,CHIP 0.01 DM
C974	87-010-197-080		CAP,CHIP 0.01 DM
C979	87-010-322-080		C-CAP,S 100P-50 CH
C981	87-010-260-080		CAP,ELECT 47-25V
C982	87-010-196-080		CHIP CAPACITOR,0.1-25
C983	87-010-197-080		CAP,CHIP 0.01 DM
C984	87-010-197-080		CAP,CHIP 0.01 DM
C987	87-010-197-080		CAP,CHIP 0.01 DM
C991	87-010-312-080		C-CAP,S 15P-50 CH
C992	87-010-312-080		C-CAP,S 15P-50 CH
C993	87-010-178-080		CHIP CAP,1000P
C995	87-010-178-080		CHIP CAP,1000P
C997	87-010-196-080		CHIP CAPACITOR,0.1-25
C998	87-010-260-080		CAP,ELECT 47-25V
C999	87-A11-155-080		CAP,TC U 0.01-16 Z F
CF831	87-008-261-010		FLTR,CF SFE10.7MA5
CF832	87-008-261-010		FLTR,CF SFE10.7MA5
CN301	87-A60-620-010		CONN,3P V 2MM JMT
CN351	87-A60-625-010		CONN,8P V 2MM JMT
CN601	87-099-719-010		CONN,30P TYK-B(X)
CN602	87-A60-131-010		CONN,6P V FE
CNA1	8A-NF8-653-010		CONN ASSY,9P TID-A(480)<EXCEPT 24U>
FFC602	88-906-251-110		FF-CABLE,6P 1.25
FFE831	A8-8ZA-191-030		8ZA-1 YFEUNM<23LH>
FFE831	A8-8ZA-193-070		8ZA-1 YFEUNC<EXCEPT 23LH>
J202	87-A60-488-010		JACK,DIA6.3 BLK ST W/SW KM16AT
J203	87-A60-238-010		TERMINAL,SP 4P (MSC)
J205	87-A60-881-010		JACK,PIN 2P MSP 242V05 PBSN<24U>
J602	87-A60-881-010		JACK,PIN 2P MSP 242V05 PBSN
J831	87-A60-202-010		TERMINAL,ANT 4P MSP-154V-02
L101	87-A50-610-010		COIL,1UH K(MDEC)
L102	87-A50-610-010		COIL,1UH K(MDEC)
L451	87-007-342-010		COIL,OSC 85K BIAS
L801	87-A50-540-010		COIL,FM DET(TOK)<24U,24LH>
L801	87-A50-608-010		COIL,FM DET-N(TOK)<EXCEPT 24U,24LH>
L802	87-A91-551-010		FLTR,PCFJZH-450 L(TOK)
L811	87-005-847-080		COIL,2.2UH(CECS)
L832	87-005-847-080		COIL,2.2UH(CECS)
L951	8A-NF8-667-010		COIL,AM PACK 4(TOK)

REF. NO.	PART NO.	KANRI NO.	DESCRIPTION
R129	87-A00-669-080		RES,M/F 0.22-2W JRA<24U,34LH,34EHA>
R130	87-A00-669-080		RES,M/F 0.22-2W JRA<24U,34LH,34EHA>
R131	87-A00-669-080		RES,M/F 0.22-2W JRA<24U,34LH,34EHA>
R131	87-A00-257-080		RES,M/F 0.15-1W J<23LH,24LH,24EHA>
R131	87-A00-258-080		RES,M/F 0.22-1W J<24HS>
R132	87-A00-669-080		RES,M/F 0.22-2W JRA<24U,34LH,34EHA>
R132	87-A00-257-080		RES,M/F 0.22-1W J<23LH,24LH,24EHA>
R132	87-A00-258-080		RES,M/F 0.22-1W J<24HS>
R143	87-A00-440-050		RES,220-1/2W J RP
R144	87-A00-440-050		RES,220-1/2W J RP
R145	87-A00-440-050		RES,220-1/2W J RP
R146	87-A00-440-050		RES,220-1/2W J RP
R653	87-A11-144-080		CAP,TC U 0.1-50 K B
R654	87-A11-144-080		CAP,TC U 0.1-50 K B
R790	87-010-197-080		CAP,CHIP 0.01 DM
R991	87-010-322-080		C-CAP,S 100P-50 CH
R993	87-010-322-080		C-CAP,S 100P-50 CH
R995	87-010-322-080		C-CAP,S 100P-50 CH
SFR451	87-A90-432-080		SFR,30K H NVZ6TLTA
SFR452	87-A90-432-080		SFR,30K H NVZ6TLTA
W99	8A-NF9-609-010		F-CABLE,9P 2.5 480MM<24U>
WH1	87-A90-510-010		HLDR,WIRE 2.5-9P
X991	87-A70-061-010		VIB,XTAL 4.500MHZ CSA-309

FRONT C.B

REF. NO.	PART NO.	KANRI NO.	DESCRIPTION
C101	87-010-196-080		CHIP CAPACITOR,0.1-25
C102	87-010-196-080		CHIP CAPACITOR,0.1-25
C103	87-010-498-040		CAP,E 10-16 GAS
C104	87-010-196-080		CHIP CAPACITOR,0.1-25
C107	87-010-493-040		CAP,E 0.47-50 GAS
C108	87-012-393-080		C-CAP,S 0.22-16 R K
C153	87-010-198-080		CAP,CHIP 0.022
C154	87-010-246-040		CAP,E 47-35 SME
C155	87-010-404-040		CAP,E 4.7-50 SME
C156	87-010-404-040		CAP,E 4.7-50 SME
C361	87-010-178-080		CHIP CAP,1000P
C362	87-010-178-080		CHIP CAP,1000P
C371	87-010-178-080		CHIP CAP,1000P
C372	87-010-178-080		CHIP CAP,1000P
C401	87-010-186-080		C-CAP,S 4700P-50 KB<24HS>
C402	87-010-112-040		CAP,E 100-16 M 11L SME<24HS>
C403	87-010-545-040		CAP,E 0.22-50 M 11L SME<24HS>
C404	87-010-320-080		C-CAP,S 68P-50 J CH GRM<24HS>
C405	87-010-544-040		CAP,E 0.1-50 M 11L SME<24HS>
C406	87-010-544-040		CAP,E 0.1-50 M 11L SME<24HS>
C407	87-010-405-040		CAP,E 10-50 M 11L SME<24HS>
C408	87-010-322-080		C-CAP,S 100P-50 J CH GRM<24HS>
C409	87-010-265-040		CAP,E 33-16 M 11L SME<24HS>
C410	87-012-369-080		C-CAP,S 0.047-50 ZF<24HS>
C413	87-010-177-080		C-CAP,S 820P-50 J SL<24HS>
C601	87-010-382-040		CAP,E 22-25 SME
C801	87-010-195-080		C-CAP,S 0.068-25 F
C802	87-010-195-080		C-CAP,S 0.068-25 F
C803	87-010-402-040		CAP,E 2.2-50 SME
C804	87-010-402-040		CAP,E 2.2-50 SME
C805	87-010-196-080		CHIP CAPACITOR,0.1-25
C806	87-010-196-080		CHIP CAPACITOR,0.1-25
C901	87-010-322-080		C-CAP,S 100P-50 CH
C902	87-010-322-080		C-CAP,S 100P-50 CH
C903	87-010-322-080		C-CAP,S 100P-50 CH
C904	87-010-322-080		C-CAP,S 100P-50 CH
C905	87-010-322-080		C-CAP,S 100P-50 CH
C906	87-010-322-080		C-CAP,S 100P-50 CH
C907	87-010-322-080		C-CAP,S 100P-50 CH
C908	87-010-322-080		C-CAP,S 100P-50 CH
C909	87-010-322-080		C-CAP,S 100P-50 CH
C910	87-010-322-080		C-CAP,S 100P-50 CH
C911	87-010-178-080		CHIP CAP,1000P
C912	87-010-196-080		CHIP CAPACITOR,0.1-25
C913	87-010-248-040		CAP,E 220-10 SME
C914	87-010-248-040		CAP,E 220-10 SME
C915	87-010-196-080		CHIP CAPACITOR,0.1-25
C916	87-010-196-080		CHIP CAPACITOR,0.1-25
C917	87-010-196-080		CHIP CAPACITOR,0.1-25
C919	87-010-197-080		CAP,CHIP 0.01 DM
C920	87-012-369-080		C-CAP,S 0.047-50F
C921	87-010-186-080		CAP,CHIP 4700P
C951	87-010-312-080		C-CAP,S 15P-50 CH
C952	87-012-155-080		C-CAP,180P-50CH
C953	87-012-140-080		CAP,470P
C961	87-010-378-040		CAP,E 10-16
C962	87-012-157-080		C-CAP,S 330P-50 CH
C963	87-010-196-080		CHIP CAPACITOR,0.1-25
CN104	87-A60-057-010		CONN,11P V 9604S-11C
CN701	87-099-720-010		CONN,30P TYK-B(P)
CN731	87-099-015-010		CONN,13P 6216V
EMI401	87-008-372-080		FLTR,EMIBL01RN1<24HS>
FFC104	88-911-101-110		FF-CABLE,11P 1.25
FFC731	88-913-301-110		FF-CABLE,13P 1.25
FL901	8A-NF9-605-010		FL,HNA-10SS12
J401	87-A61-242-010		JACK 6.3 BLK MONO W/SW VKM<24HS>
L951	87-A50-434-010		COIL,CLK 4.19M(TOKO)
LED201	87-A40-619-040		LED,SLR-56PT-T31-W GRN
LED202	87-A40-619-040		LED,SLR-56PT-T31-W GRN
LED204	87-A40-619-040		LED,SLR-56PT-T31-W GRN
LED205	87-A40-619-040		LED,SLR-56PT-T31-W GRN
LED209	87-A40-317-080		LED,SLR-342VCT31 RED
LED210	87-A40-619-040		LED,SLR-56PT-T31-W GRN
S301	87-A90-164-080		SW,TACT SKQNAB(N)
S302	87-A90-164-080		SW,TACT SKQNAB(N)
S303	87-A90-164-080		SW,TACT SKQNAB(N)
S304	87-A90-164-080		SW,TACT SKQNAB(N)
S305	87-A90-164-080		SW,TACT SKQNAB(N)
S306	87-A90-164-080		SW,TACT SKQNAB(N)
S307	87-A90-164-080		SW,TACT SKQNAB(N)
S308	87-A90-164-080		SW,TACT SKQNAB(N)
S309	87-A90-164-080		SW,TACT SKQNAB(N)
S321	87-A90-164-080		SW,TACT SKQNAB(N)
S322	87-A90-164-080		SW,TACT SKQNAB(N)
S323	87-A90-164-080		SW,TACT SKQNAB(N)
S324	87-A90-164-080		SW,TACT SKQNAB(N)
S325	87-A90-164-080		SW,TACT SKQNAB(N)
S326	87-A90-164-080		SW,TACT SKQNAB(N)
S341	87-A90-164-080		SW,TACT SKQNAB(N)
S342	87-A90-164-080		SW,TACT SKQNAB(N)
S343	87-A90-164-080		SW,TACT SKQNAB(N)
S344	87-A90-164-080		SW,TACT SKQNAB(N)
S345	87-A90-164-080		SW,TACT SKQNAB(N)
S346	87-A90-164-080		SW,TACT SKQNAB(N)
S347	87-A90-164-080		SW,TACT SKQNAB(N)
S348	87-A90-164-080		SW,TACT SKQNAB(N)
S349	87-A90-164-080		SW,TACT SKQNAB(N)
S350	87-A90-164-080		SW,TACT SKQNAB(N)
S361	87-A91-633-010		SW,RTRY XRE012103PVB25FINA 1-2
S371	87-A91-632-010		SW,RTRY XRE012103PVB25FINB 1-2
VR401	87-NB7-602-010		VR,RTRY 10KAX1 1V<24HS>

PT C.B <24U ONLY>

REF. NO.	PART NO.	KANRI NO.	DESCRIPTION
C183	87-010-387-080		CAP,E 470-25 SME
C184	87-010-403-080		CAP,ELECT 3.3-50V
⚠ PT1	8A-NF9-612-010		PT,ANF-9 U
⚠ PT181	8A-NF8-661-010		PT,SUB ANF-8(U)
⚠ RY181	87-A91-418-010		RELAY,AC12V G5PA-1-M
⚠ T181	87-A60-317-010		TERMINAL,1P MSC
⚠ T182	87-A60-317-010		TERMINAL,1P MSC
WH181	87-A90-510-010		HLDR,WIRE 2.5-9P

REF. NO.	PART NO.	KANRI NO.	DESCRIPTION

PT C.B <EXCEPT 24U>

REF. NO.	PART NO.	KANRI NO.	DESCRIPTION
C1	87-010-387-080		CAP,E 470-25 M SME
C31	87-010-403-080		CAP,E 3.3-50 M 11L SME
CN1	87-A61-110-010		CPNN,9P V TID-A
⚠ PT1	8A-NF9-614-010		PT,ANF-9 HR-HI<23LH,24LH,24EHA>
⚠ PT1	8A-NF9-613-010		PT,ANF-9 HR<24HS>
⚠ PT1	8A-NF9-616-010		PT,ANF-9 LH-H<34LH,34EHA>
⚠ PT2	8A-NF8-673-010		PT,SUB ANF-8(H)KAMI
⚠ RY1	87-A91-339-010		RELAY,AC DC12V GSPA-2
⚠ S1	87-A90-165-010		SW,SL 1-2-3 SWS2301<23LH,24LH,24EHA,34LH,34EHA>
⚠ T1	87-A60-317-010		TERMINAL,1P MSC
⚠ T2	87-A60-317-010		TERMINAL,1P MSC

DECK C.B

REF. NO.	PART NO.	KANRI NO.	DESCRIPTION
CN1	87-099-753-010		CONN,11P H 9604
SFR1	87-024-581-010		SFR,3.3K H KVSF637A
SOL1	82-ZM3-627-010		SOL ASSY,27 S0
SOL2	82-ZM3-627-010		SOL ASSY,27 S0
SW1	87-A90-673-010		SW,MICRO ESE11SH1C
SW2	87-A91-500-010		SW,MICRO MPU11470MLB0
SW3	87-A91-500-010		SW,MICRO MPU11470MLB0
SW4	87-A91-500-010		SW,MICRO MPU11470MLB0
SW5	87-A90-673-010		SW,MICRO ESE11SH1C
W1	82-ZM3-601-010		RBN-CORD,4P-75

○チップ抵抗部品コード／CHIP RESISTOR PART CODE

チップ抵抗部品コードの成り立ち
Chip Resistor Part Coding

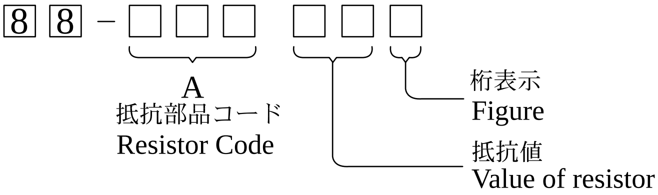

チップ抵抗
Chip resistor

容量 Wattage	種類 Type	許容誤差 Tolerance	記号 Symbol	寸法／Dimensions (mm) 外形／Form	L	W	t	抵抗コード : A Resistor Code : A
1/16W	1005	± 5%	CJ	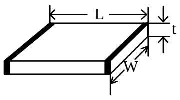	1.0	0.5	0.35	104
1/16W	1608	± 5%	CJ		1.6	0.8	0.45	108
1/10W	2125	± 5%	CJ		2	1.25	0.45	118
1/8W	3216	± 5%	CJ		3.2	1.6	0.55	128

TRANSISTOR ILLUSTRATION

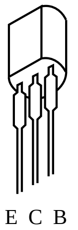

CD1585
CSA952
CSC4115
KTA1266
KTC3198

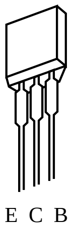

DTC114ES
KTC3199

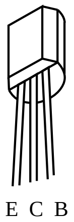

2SC3331

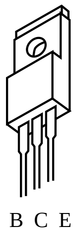

2SB1370

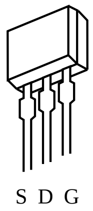

2SJ460
2SK2541

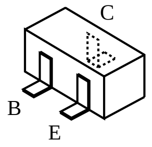

2SA1235
2SC2714
2SC3052
CMBT5401
CMBT5551
DTC114EK
KRA102S
KRC102S
KRC104S
RT1P141C
RT1P144C

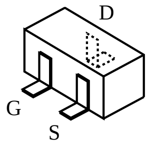

2SK2158

FL (HNA–10SS12) GRID ASSIGNMENT / ANODE CONNECTION / PIN CONNECTION

GRID ASSIGNMENT

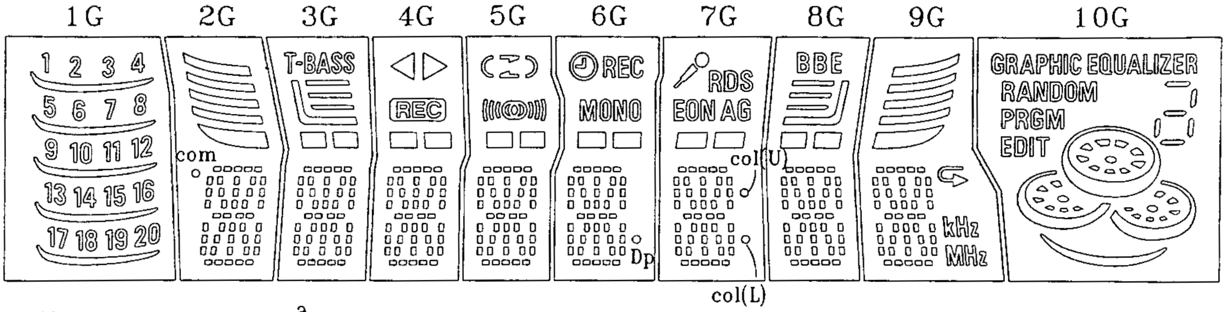

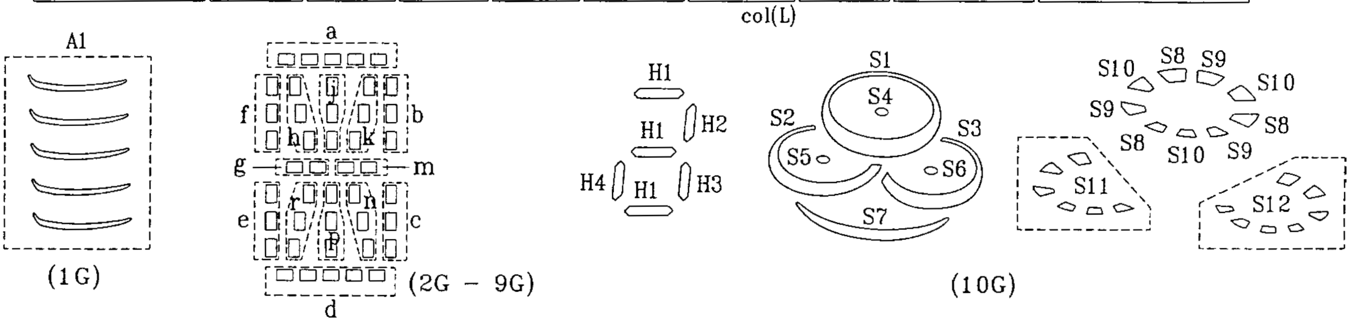

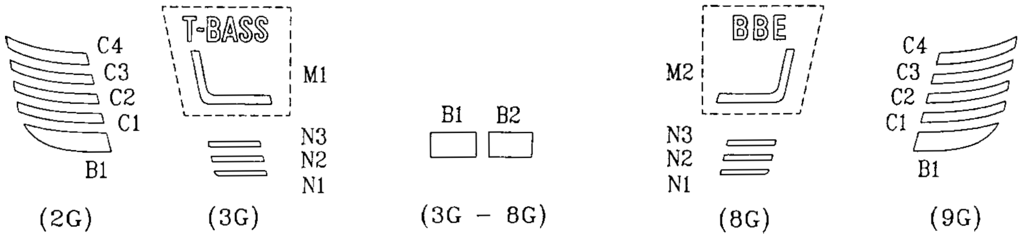

ANODE CONNECTION

	1G	2G	3G	4G	5G	6G	7G	8G	9G	10G
P1	20	d	d	d	d	d	d	d	d	S1
P2	19	n	n	n	n	n	n	n	n	S2
P3	18	p	p	p	p	p	p	p	p	S3
P4	17	r	r	r	r	r	r	r	r	S4
P5	16	e	e	e	e	e	e	e	e	S5
P6	15	c	c	c	c	c	c	c	c	S6
P7	14	g	g	g	g	g	g	g	g	S7
P8	13	m	m	m	m	m	m	m	m	S8
P9	12	f	f	f	f	f	f	f	f	S9
P10	11	b	b	b	b	b	b	b	b	S10
P11	10	k	k	k	k	k	k	k	k	S11
P12	9	j	j	j	j	j	j	j	j	S12
P13	8	h	h	h	h	h	h	h	h	EDIT
P14	7	a	a	a	a	a	a	a	a	PRGM
P15	6	B1	B1	B1	B1	B1	B1	B1	B1	RANDOM
P16	5	C1	B2	B2	B2	B2	B2	B2	C1	GRAPHIC EQUALIZER
P17	4	C2	M1	REC	((◎))	Dp	col(U)	M2	C2	H1
P18	3	C3	N1	◁	(	MONO	col(L)	N1	C3	H2
P19	2	C4	N2	▷	⇄	REC	EON	N2	C4	H3
P20	1	com	N3		)	⊙	AG	N3	↪	H4
P21	A1						RDS		kHz	
P22							🎤		MHz	

PIN CONNECTION

PIN NO.	45	44	43	42	41	40	39	38	37	36	35	34	33	32	31	30	29	28	27	26	25	24	23	22	21	20	19	18	17	16	15	14	13	12	11
CONNECTION	F2	F2	NP	NP	P1	P2	P3	P4	P5	P6	P7	P8	P9	P10	P11	P12	P13	P14	P15	P16	P17	P18	P19	P20	P21	P22	NC	NC	NC	NC	NC	1G	2G	3G	4G

10	9	8	7	6	5	4	3	2	1
5G	6G	7G	8G	9G	10G	NP	NP	F1	F1

◎ Notes ◎

1) Fn : Filament pin
2) nG : Grid pin
3) Pn : Anode pin
4) NC : No Connected pin
5) NP : No pin

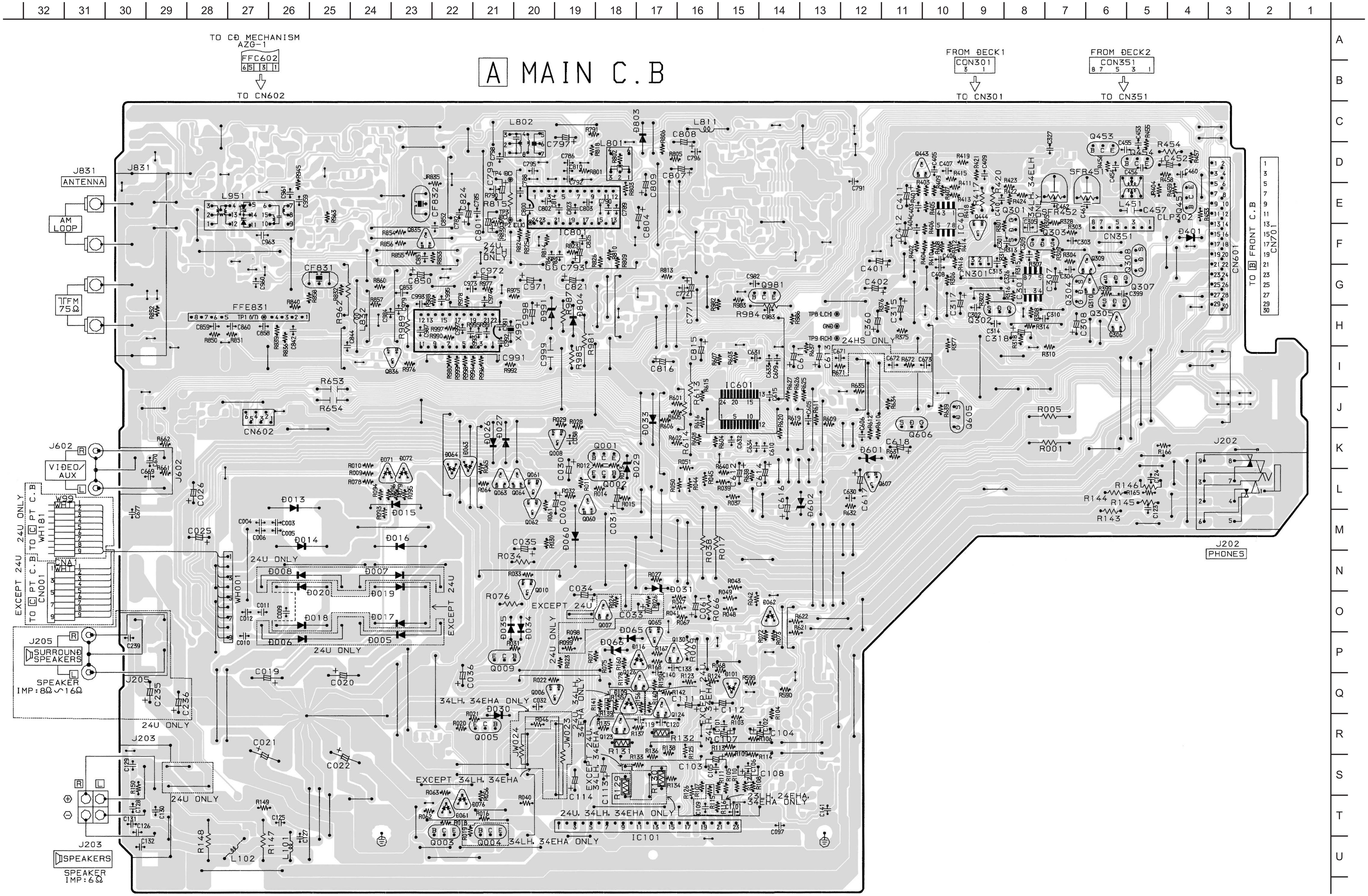
A MAIN C.B
TO CD MECHANISM AZG-1
FFC602
TO CN602
FROM DECK1
CON301
TO CN301
FROM DECK2
CON351
TO CN351
J831 ANTENNA
AM LOOP
FM 75Ω
J602 VIDEO/AUX
J205 SURROUND SPEAKERS
SPEAKER IMP:8Ω∽16Ω
J203 SPEAKERS
SPEAKER IMP:6Ω
J202 PHONES
TO B FRONT C.B CN701
IC801
IC601
IC101
24U ONLY
EXCEPT 24U
34LH, 34EHA ONLY
EXCEPT 34LH, 34EHA
24U, 34LH, 34EHA ONLY
24HS ONLY

SCHEMATIC DIAGRAM – 1 (MAIN : 1 / 2 <AMP SECTION>)

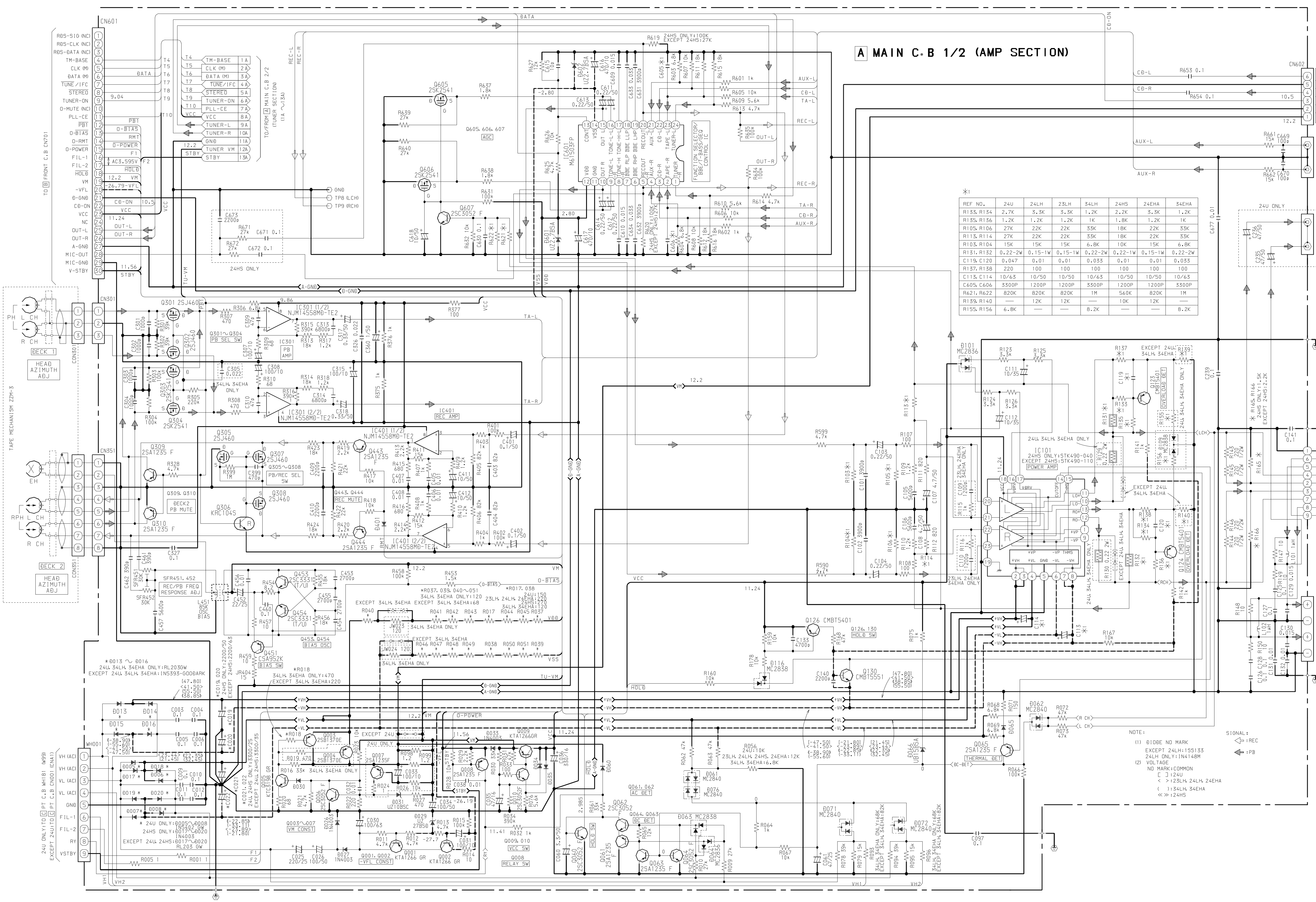

✱1

REF NO.	24U	24LH	23LH	34LH	24HS	24EHA	34EHA
R133, R134	2.7K	3.3K	3.3K	1.2K	2.2K	3.3K	1.2K
R135, R136	1.2K	1.2K	1.2K	1K	1.8K	1.2K	1K
R105, R106	27K	22K	22K	33K	18K	22K	33K
R113, R114	27K	22K	22K	33K	18K	22K	33K
R103, R104	15K	15K	15K	6.8K	10K	15K	6.8K
R131, R132	0.22-2W	0.15-1W	0.15-1W	0.22-2W	0.22-1W	0.15-1W	0.22-2W
C119, C120	0.047	0.01	0.01	0.033	0.01	0.01	0.033
R137, R138	220	100	100	100	100	100	100
C113, C114	10/63	10/50	10/50	10/63	10/50	10/50	10/63
C605, C606	3300P	1200P	1200P	3300P	1200P	1200P	3300P
R621, R622	820K	820K	820K	1M	560K	820K	1M
R139, R140	——	12K	12K	——	10K	12K	——
R155, R156	6.8K	——	——	8.2K	——	——	8.2K

SCHEMATIC DIAGRAM – 2 (MAIN : 2 / 2 <TUNER SECTION>)

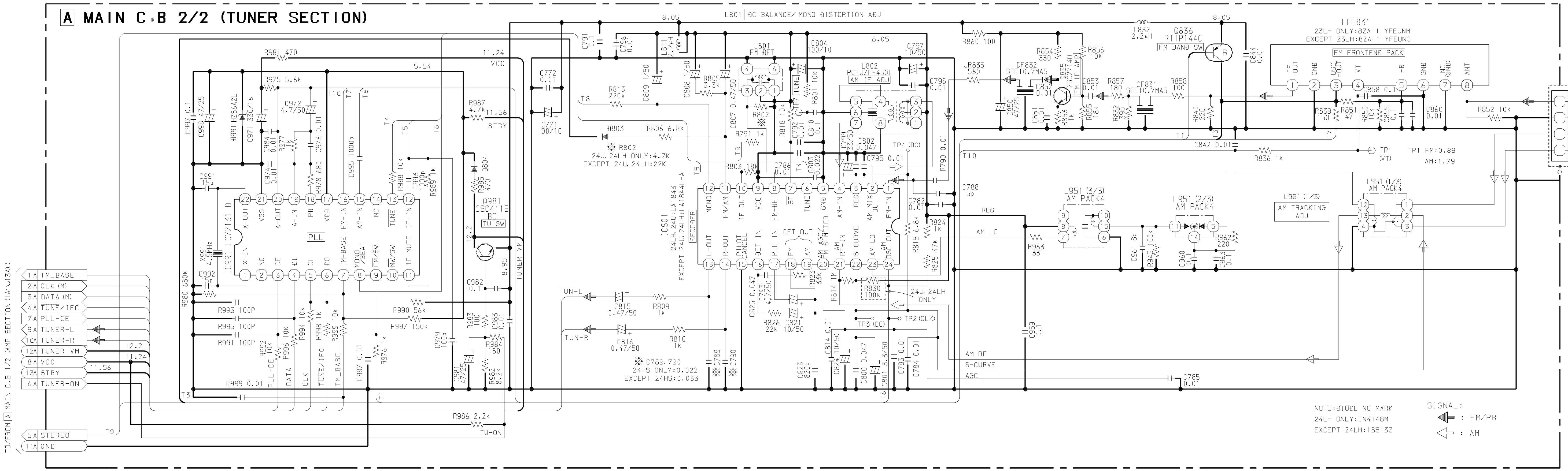

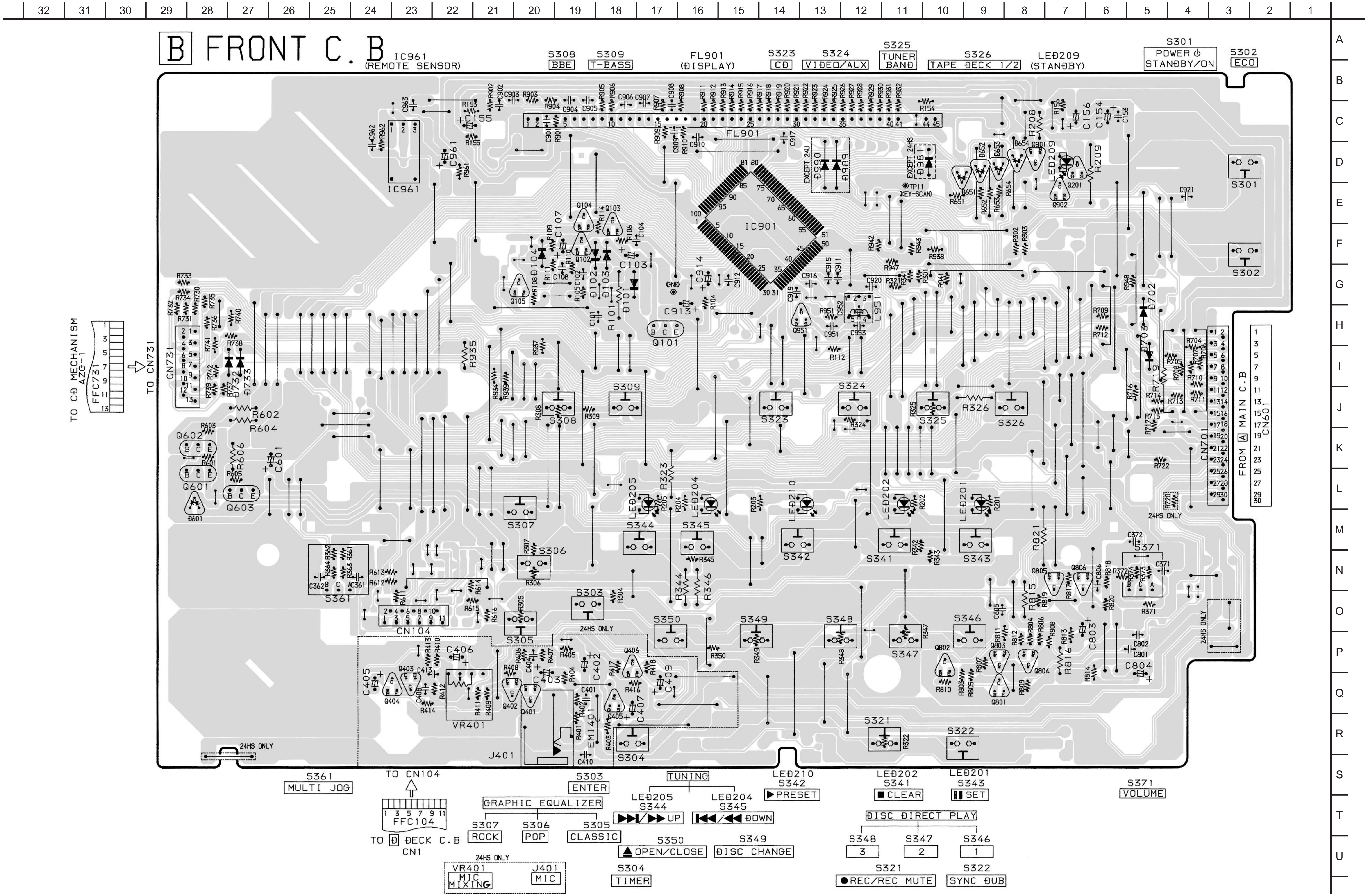
B FRONT C.B
IC961 (REMOTE SENSOR)
S308 BBE
S309 T-BASS
FL901 (DISPLAY)
S323 CD
S324 VIDEO/AUX
S325 TUNER BAND
S326 TAPE DECK 1/2
LED209 (STANDBY)
S301 POWER STANDBY/ON
S302 ECO
TO CD MECHANISM AZG-1
FFC731
TO CN731
FROM A MAIN C.B CN601
S361 MULTI JOG
TO CN104
FFC104
TO D DECK C.B CN1
S303 ENTER
GRAPHIC EQUALIZER
S307 ROCK
S306 POP
S305 CLASSIC
24HS ONLY
VR401 MIC MIXING
J401 MIC
TUNING
LED205 S344 UP
LED204 S345 DOWN
S350 OPEN/CLOSE
S349 DISC CHANGE
S304 TIMER
LED210 S342 PRESET
LED202 S341 CLEAR
LED201 S343 SET
DISC DIRECT PLAY
S348 3
S347 2
S346 1
S321 REC/REC MUTE
S322 SYNC DUB
S371 VOLUME

SCHEMATIC DIAGRAM – 3 (FRONT / DECK)

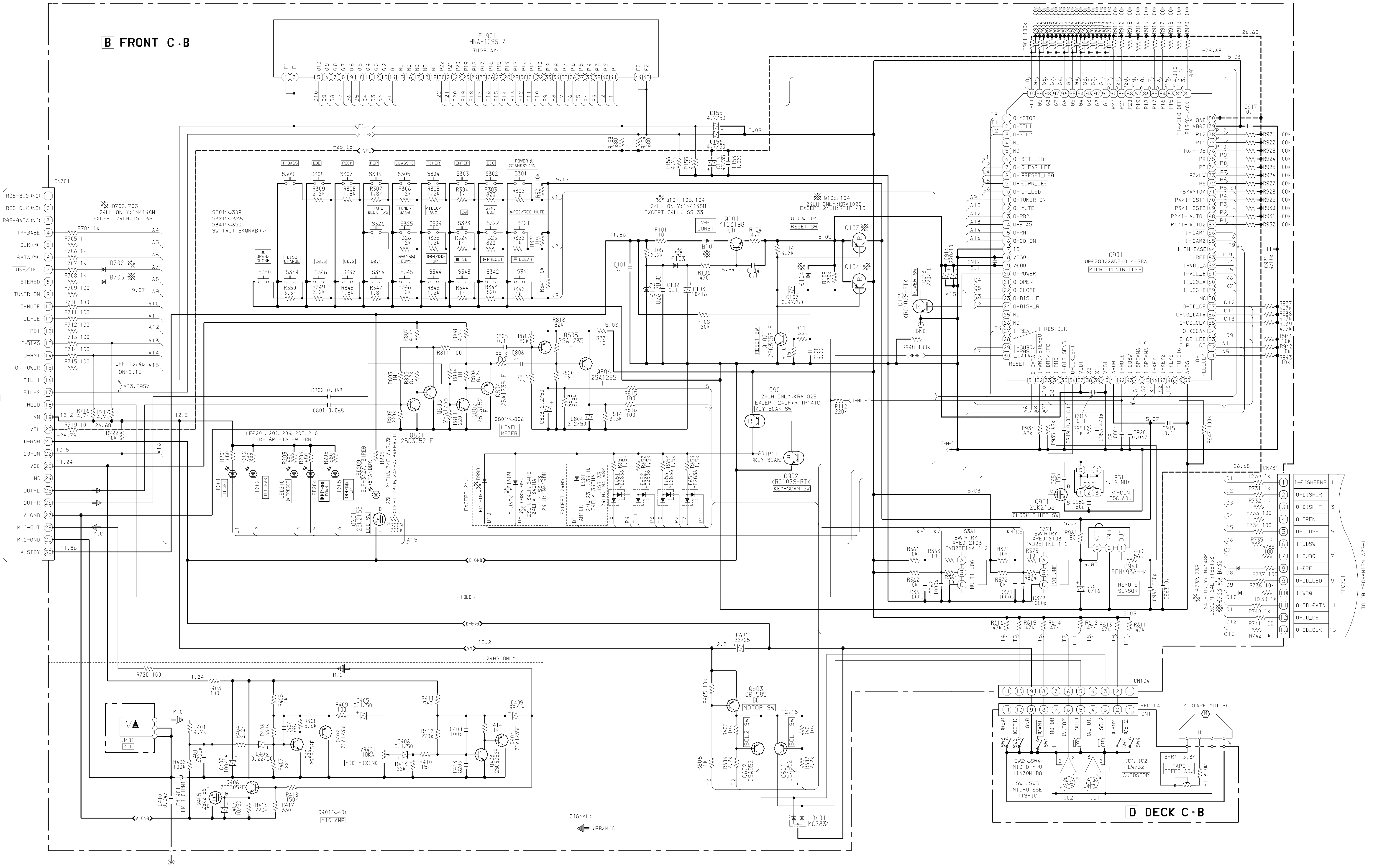

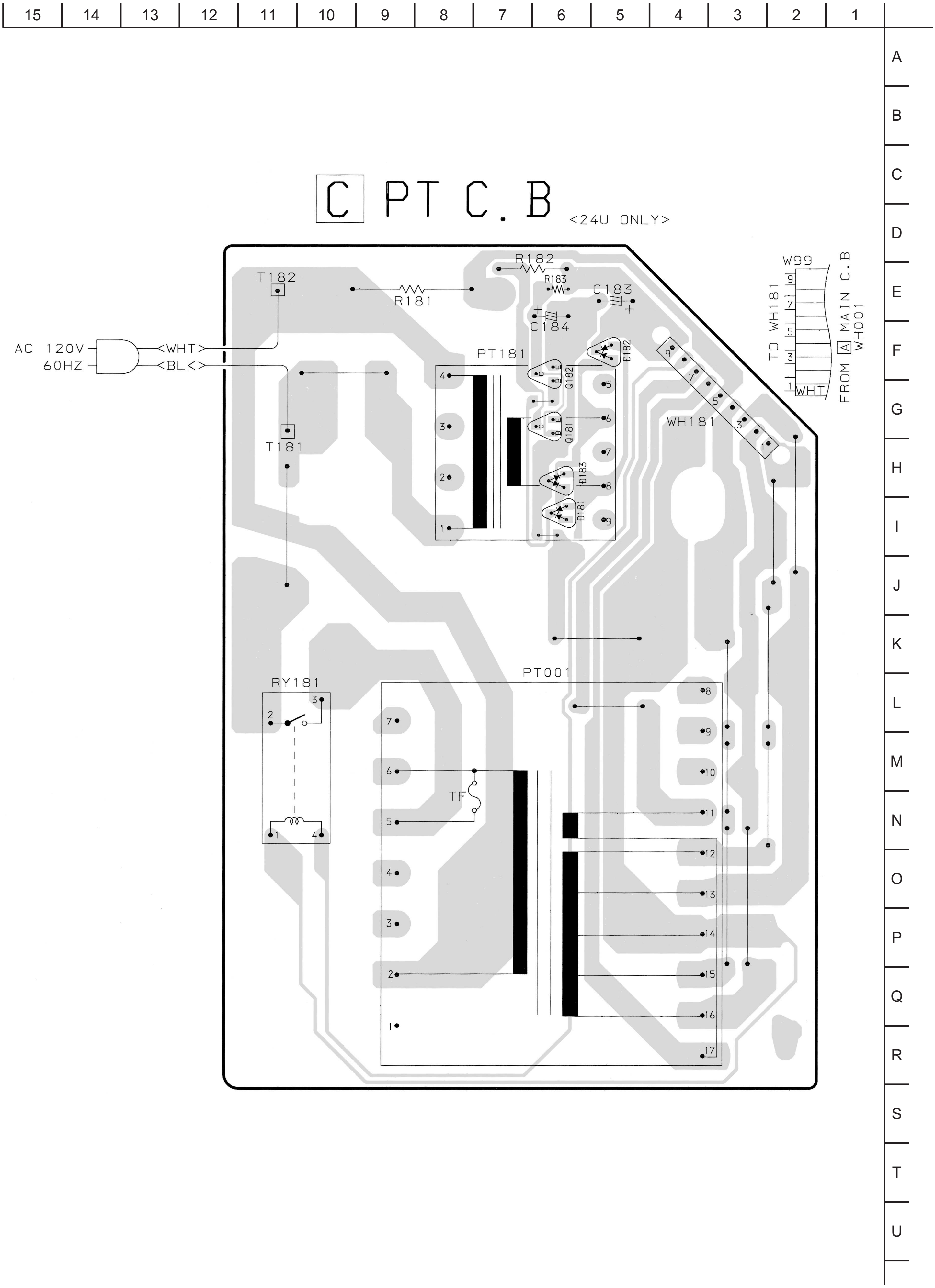

15 14 13 12 11 10 9 8 7 6 5 4 3 2 1
A B C D E F G H I J K L M N O P Q R S T U
C PT C.B
<24U ONLY>
AC 120V
60HZ
<WHT>
<BLK>
T182
T181
R182
R183
R181
C183
C184
PT181
Q182
Q181
D182
D183
D181
WH181
W99
WHT
TO WH181
FROM A MAIN C.B WH001
RY181
PT001
TF

SCHEMATIC DIAGRAM – 4 (PT) <24U ONLY>

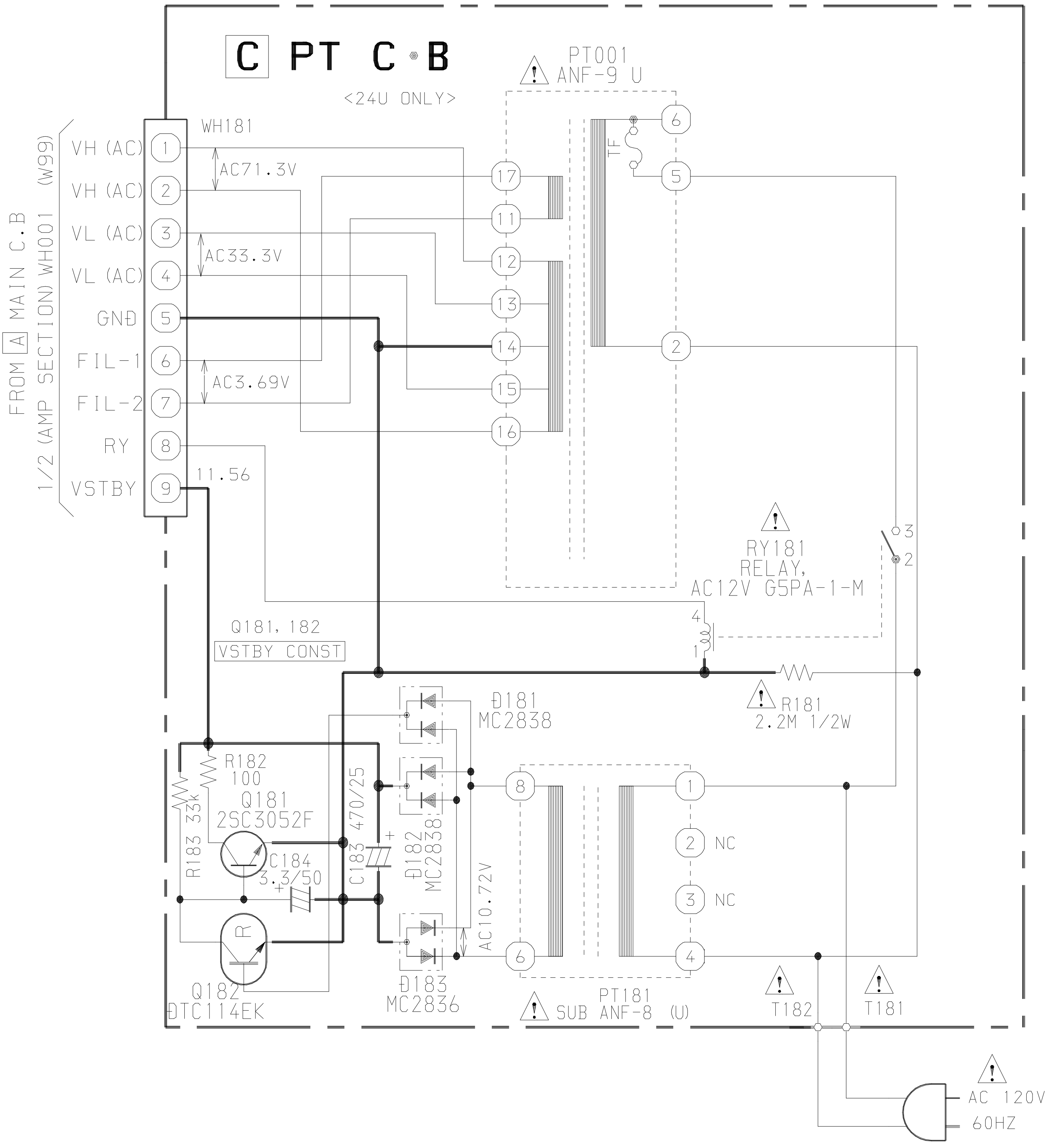

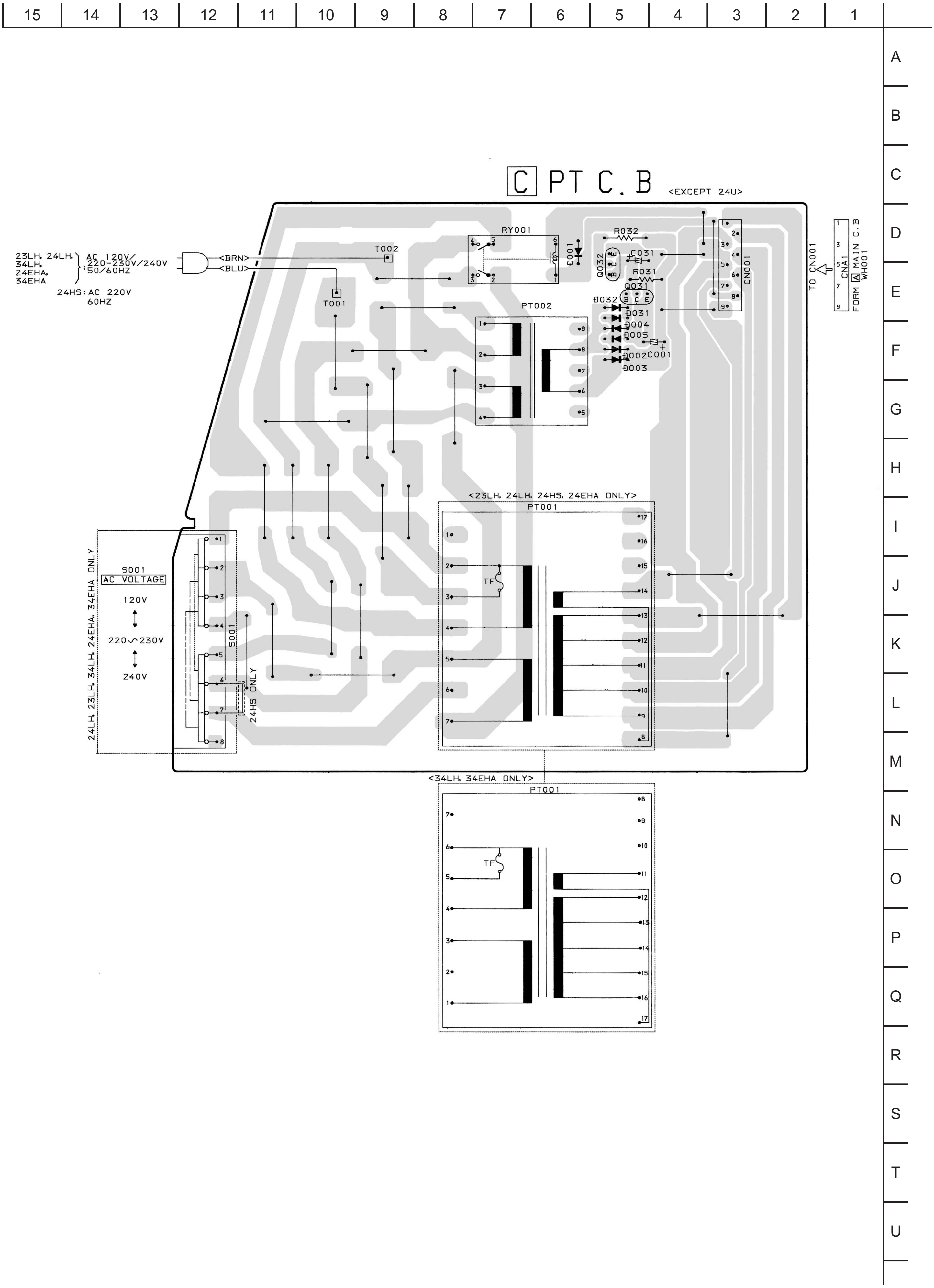
15 14 13 12 11 10 9 8 7 6 5 4 3 2 1
A B C D E F G H I J K L M N O P Q R S T U
C PT C.B <EXCEPT 24U>
23LH, 24LH, 34LH, 24EHA, 34EHA : AC 120V/220-230V/240V 50/60HZ
24HS: AC 220V 60HZ
<BRN>
<BLU>
T002
T001
RY001
D001
R032
C031
Q032
R031
Q031
D032
D031
D004
D005
D002
C001
D003
PT002
CN001
TO CN001
CNA1
FORM A MAIN C.B
WH001
<23LH, 24LH, 24HS, 24EHA ONLY>
PT001
TF
S001
AC VOLTAGE
120V
220∽230V
240V
24LH, 23LH, 34LH, 24EHA, 34EHA ONLY
24HS ONLY
<34LH, 34EHA ONLY>
PT001
TF

SCHEMATIC DIAGRAM – 5 (PT) <EXCEPT 24U>

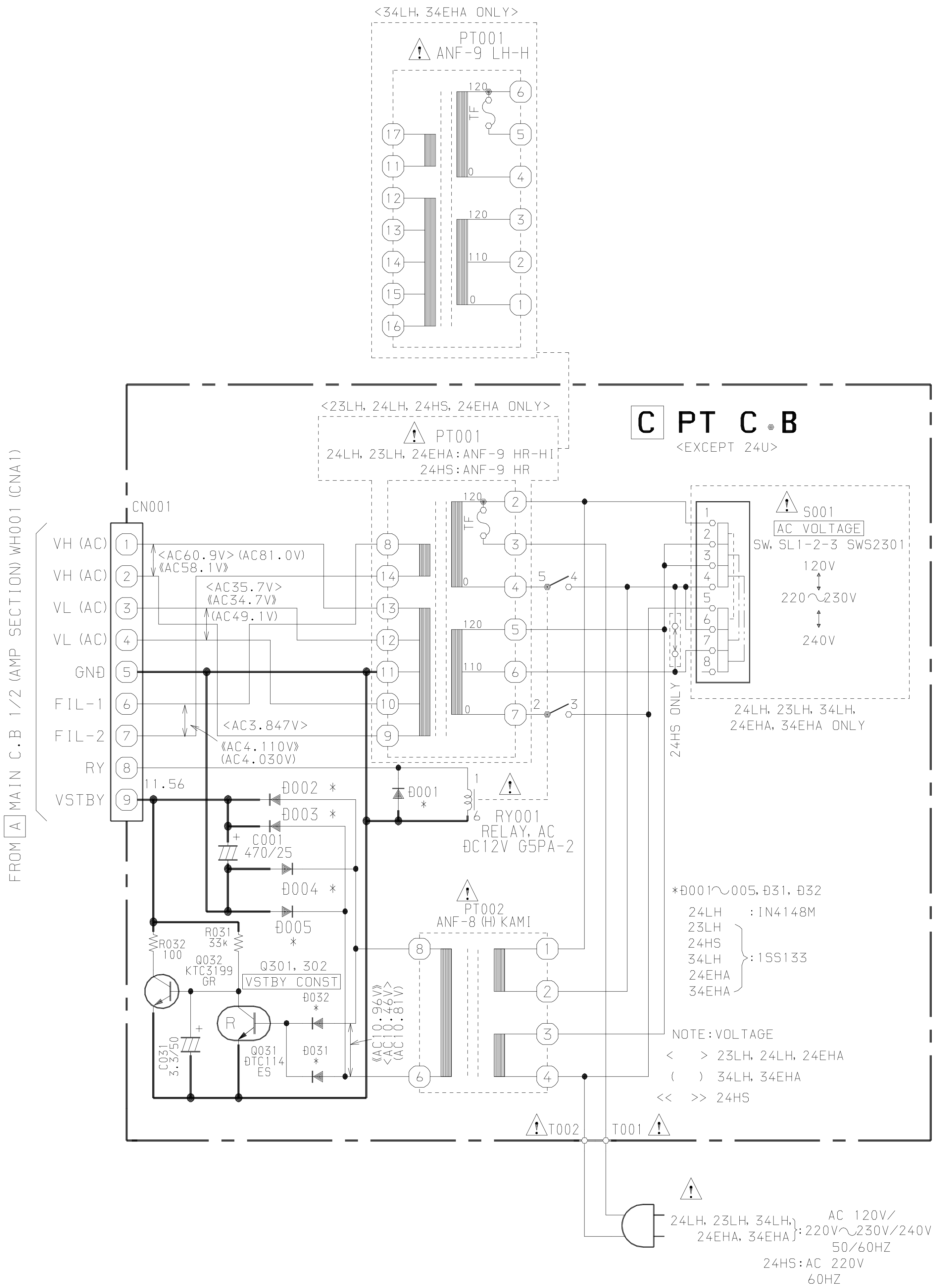

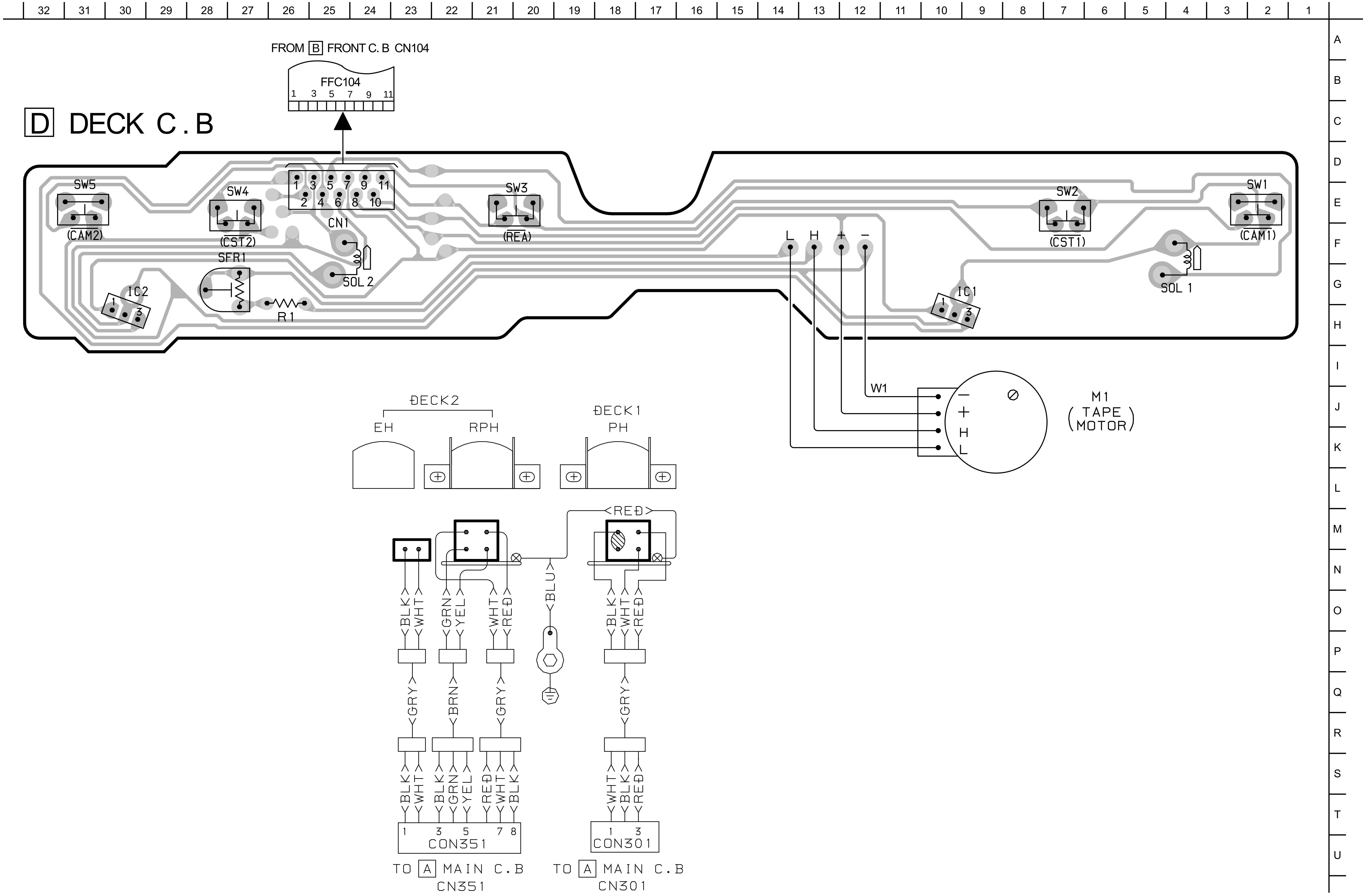
32 31 30 29 28 27 26 25 24 23 22 21 20 19 18 17 16 15 14 13 12 11 10 9 8 7 6 5 4 3 2 1
A B C D E F G H I J K L M N O P Q R S T U
FROM B FRONT C. B CN104
FFC104
D DECK C . B
SW5
(CAM2)
SW4
(CST2)
CN1
SFR1
SOL 2
IC2
R1
SW3
(REA)
L H + –
SW2
(CST1)
SW1
(CAM1)
IC1
SOL 1
W1
M1
(TAPE MOTOR)
DECK2
EH
RPH
DECK1
PH
<RED>
BLK WHT
GRN YEL
WHT RED
BLU
BLK WHT RED
GRY
BRN
GRY
GRY
BLK WHT
BLK GRN YEL
RED WHT BLK
WHT BLK RED
CON351
CON301
TO A MAIN C.B CN351
TO A MAIN C.B CN301

IC BLOCK DIAGRAM

IC, LA1844L-A

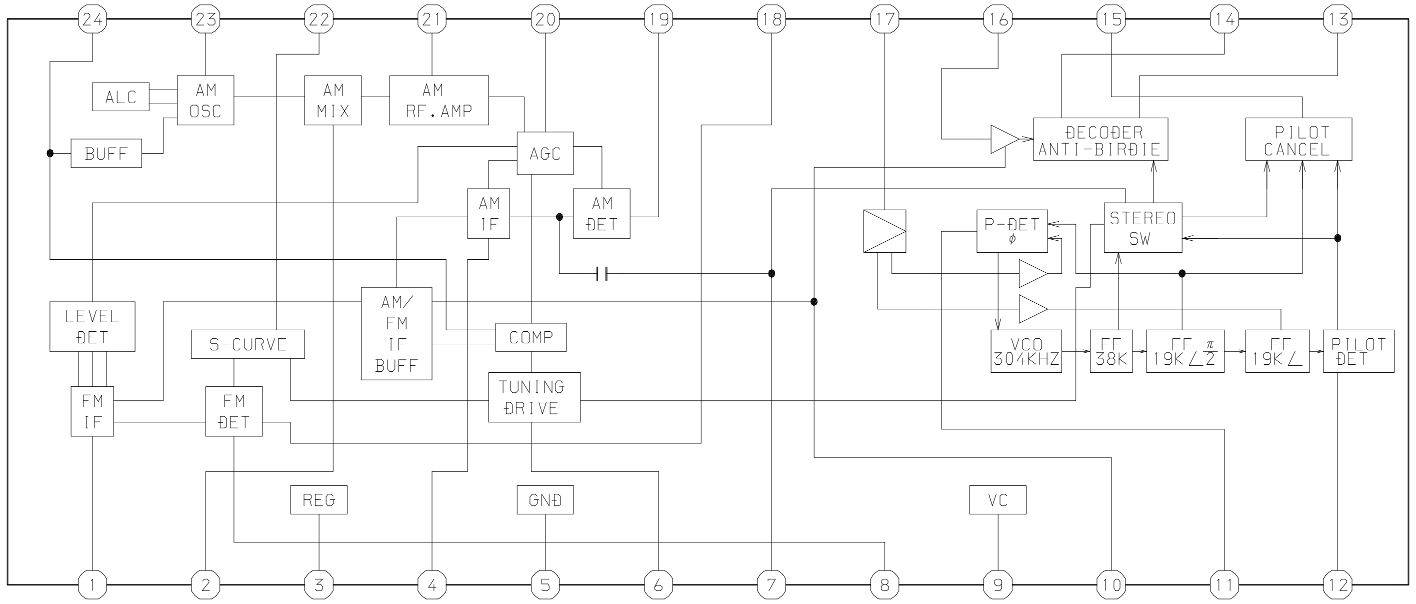

IC, LA1843

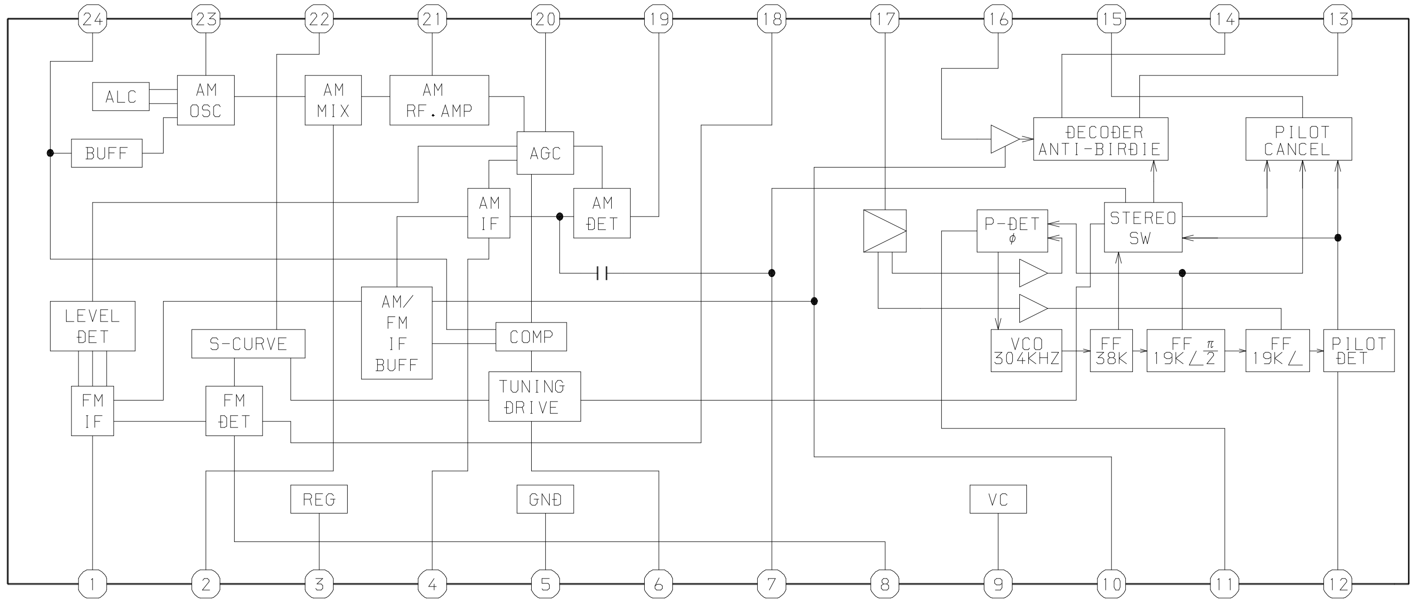

IC, LC72131D

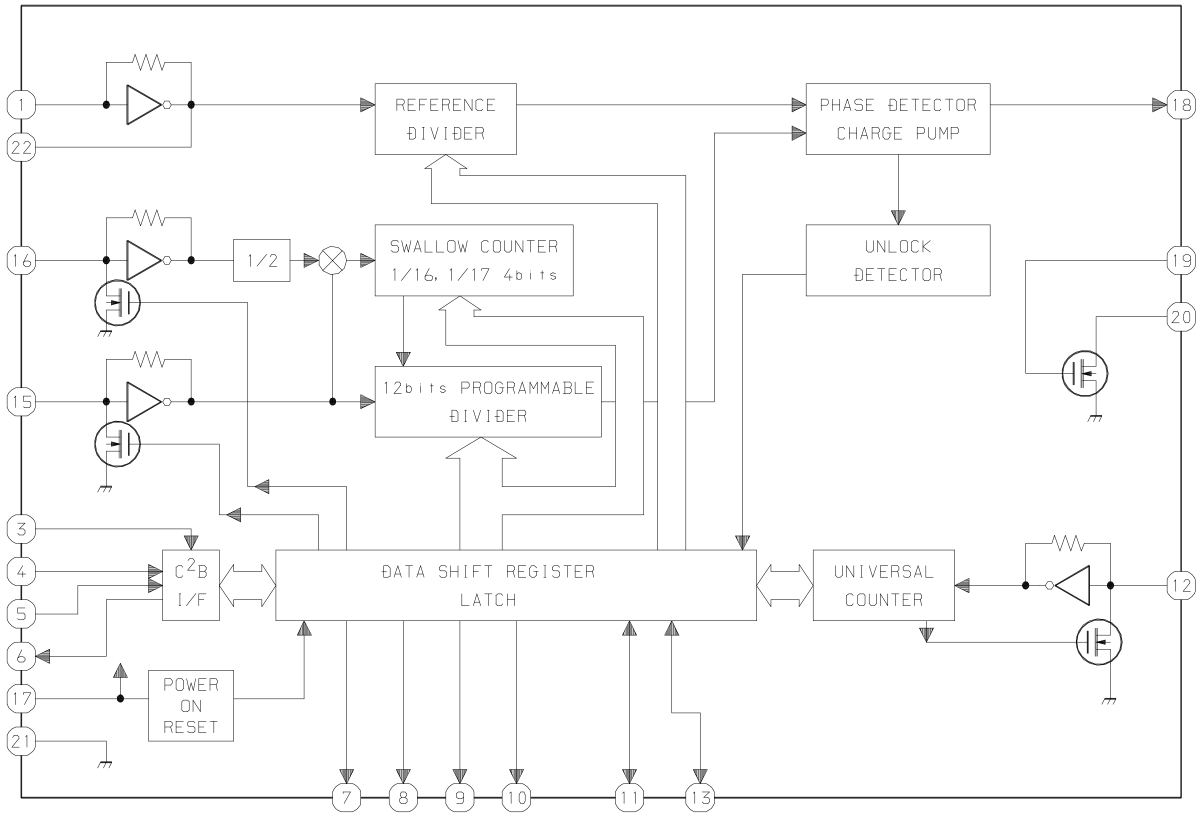

IC, M61503FP

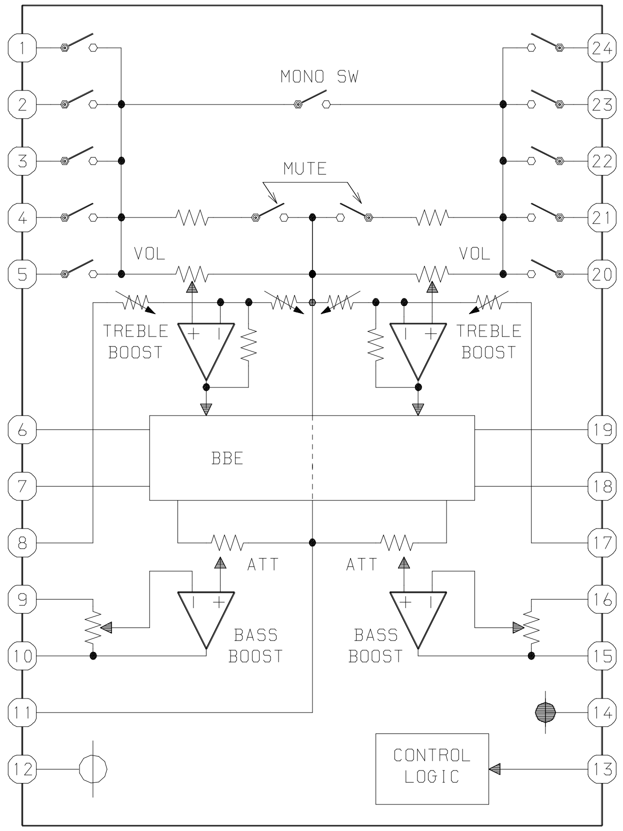

IC DESCRIPTION

IC, µPD780226GF-014-3BA

Pin No.	Pin Name	I/O	Description
1	O-MOTOR	O	DECK MOTOR ON/OFF output.
2	O-SOL1	O	DECK1 solenoid output.
3	O-SOL2	O	DECK2 solenoid output.
4	NC	–	Not connected.
5	NC	–	Not connected.
6	O-SET_LED	O	SET LED ON/OFF output.
7	O-CLEAR_LED	O	CLEAR LED ON/OFF output.
8	O-PRESET_LED	O	PRESET LED ON/OFF output.
9	O-DOWN_LED	O	DOWN LED ON/OFF output.
10	O-UP_LED	O	UP LED ON/OFF output.
11	O-TUNER_ON	O	TUNER ON output.
12	O-MUTE	O	MUTE output.
13	O-PB2	O	DECK2/DECK1 play output.
14	O-BIAS	O	BIAS ON output.
15	O-RMT	O	REC mute output.
16	O-CD_ON	O	CD ON output.
17	IC	–	Internal connection (connected to GND).
18	VSS0	–	GND.
19	VDD0	–	Power supply.
20	O-POWER	O	System power supply ON/OFF output.
21	O-OPEN	O	CD tray open data output.
22	O-CLOSE	O	CD tray close data output.
23	O-DISH_F	O	CD turntable forward rotation output.
24	O-DISH_R	O	CD turntable reverse rotation output.
25	NC	–	Not connected.
26	NC	–	Not connected.
27	I-REA	I	Deck 2 side-A recordable switch data input. "L" = REC.
28	I-RDS_CLK	I	Tuner RDS clock input. (Not used)
29	I-SUBQ/I-RDS_DATA	I	CD SUBQ data input / Tuner RDS data input (not used).
30	RESET	–	System reset.
31	O-DATA	O	Data output for MAIN.
32	I-WRQ/STEREO	I	CD WRQ input / Tuner stereo input.
33	I-DRF/IFC	I	CD DRF input / Tune IF count serial data input.
34	I-RMC	I	System remote control input.
35	I-DISHSENS	I	CD turntable photo sensor input.
36	O-CLK_SFT	O	Micon clock shift output.
37	VDD1	–	Power supply.
38	X2	–	4.19MHz oscillator circuit.
39	X1	–	4.19MHz oscillator circuit.
40	VSS1	–	GND.
41	AVDD	–	Power supply.

Pin No.	Pin Name	I/O	Description
42	I-HOLD	I	Power failure detected input.
43	I-CDSW	I	CD mecha switch input.
44	I-SPEANA_L	I	A/D L-input for spectrum analyser level display.
45	I-SPEANA_R	I	A/D R-input for spectrum analyser level display.
46	I-KEY1	I	Key1 input.
47	I-KEY2	I	Key2 input.
48	I-KEY3	I	Key3 input.
49	I-TU_SIG	I	Tuner signal input. (Not used)
50	AVSS	–	GND.
51	O-PLL_CLK	O	PLL clock enable output.
52	O-PLL_CE	O	Chip enable output for tuner PLL.
53	O-CD_LED	O	CD flash window LED ON/OFF output.
54	O-KSCAN	O	Key scan output.
55	O-CD_CLK	O	CD clock output.
56	O-CD_DATA	O	CD data output.
57	O-CD_CE	O	CD enable output.
58	NC	–	Not connected.
59	I-JOG_B	I	Dial jog rotary encoder input B.
60	I-JOG_A	I	Dial jog rotary encoder input A.
61	I-VOL_B	I	Volume rotary encoder input B.
62	I-VOL_A	I	Volume rotary encoder input A.
63	I-$\overline{REB}$	–	Deck 2 side-B recordable switch data input. "L" = REC. (Not used)
64	I-TM_BASE	I	Base input for clock.
65	I-$\overline{CAM2}$	I	DECK2 CAM switch data input.
66	I-$\overline{CAM1}$	I	DECK1 CAM switch data input.
67	P1/I-AUTO2	O/I	FL segment P1 output / DECK2 AUTO STOP switch data input.
68	P2/I-AUTO1	O/I	FL segment P2 output / DECK1 AUTO STOP switch data input.
69	P3/I-CST2	O/I	FL segment P3 output / DECK2 cassette detect switch data input.
70	P4/I-CST1	O/I	FL segment P4 output / DECK1 cassette detect switch2 data input.
71	P5/AM10K	O/I	FL segment P5 output / AM10K data input <except 24HS>.
72	P6	O	FL segment P6 output.
73	P7/LW	O/I	FL segment P7 output / LW mode data input (not used).
74 ~ 75	P8 ~ P9	O	FL segment P8 ~ P9 output.
76	P10/RDS	O/I	FL segment P10 output / RDS data input (not used).
77 ~ 78	P11 ~ P12	O	FL segment P11 ~ P12 output.
79	VDD2	–	Power supply.
80	VLOAD	–	Power supply for FL display.
81	P13/C-JACK	O/I	FL segment P13 output / C-JACK data input <except 24U>.
82	P14/ECO-OFF	O/I	FL segment P14 output / ECO-OFF data input <except 24U>.
83 ~ 90	P15 ~ P22	O	FL segment P15 ~ P22 output.
91 ~100	G1 ~ G10	O	FL grid G1 ~ G10 output.

IC, LC72131D

<table>
<tr><th>Pin No.</th><th>Pin Name</th><th>I/O</th><th>Description</th></tr>
<tr><td>1</td><td>X-IN</td><td>I</td><td rowspan="2">A crystal oscillator (4.5MHz) is connected between these pins.</td></tr>
<tr><td>22</td><td>X-OUT</td><td>O</td></tr>
<tr><td>2</td><td>NC</td><td>–</td><td>Not connected.</td></tr>
<tr><td>3</td><td>CE</td><td>I</td><td>To enable the IC. Active "H".</td></tr>
<tr><td>4</td><td>DI</td><td>I</td><td>Digital data input from CPU (μPD780226GF-014-3BA) when relevant key is operated. Active "H".</td></tr>
<tr><td>5</td><td>CL</td><td>I</td><td>To clock in the data DI.</td></tr>
<tr><td>6</td><td>DO</td><td>O</td><td>Digital data output to CPU (μPD780226GF-014-3BA).</td></tr>
<tr><td>7</td><td>TM-BASE</td><td>O</td><td>Outputs a reference clock signal (8Hz) for the clock.</td></tr>
<tr><td>8</td><td>$\overline{\text{MONO}}$ / BEAT</td><td>O</td><td>Outputs "H" when MONO / BEAT is switched.</td></tr>
<tr><td>9</td><td>$\overline{\text{FM}}$ / $\overline{\text{SW}}$</td><td>O</td><td>Output "L" or "H" as follows:
<table>
<tr><td colspan="2">2 BAND</td><td colspan="3">3 BAND</td><td colspan="3">3 BAND</td></tr>
<tr><td>AM</td><td>FM</td><td>LW</td><td>MW</td><td>FM</td><td>MW</td><td>SW</td><td>FM</td></tr>
<tr><td>H</td><td>L</td><td>H</td><td>H</td><td>L</td><td>H</td><td>L</td><td>L</td></tr>
</table></td></tr>
<tr><td>10</td><td>$\overline{\text{MW}}$ / SW</td><td>O</td><td>Outputs "L" or "H" as follows:
<table>
<tr><td colspan="2">2 BAND</td><td colspan="3">3 BAND</td><td colspan="3">3 BAND</td></tr>
<tr><td>AM</td><td>FM</td><td>LW</td><td>MW</td><td>FM</td><td>MW</td><td>SW</td><td>FM</td></tr>
<tr><td>L</td><td>L</td><td>H</td><td>L</td><td>L</td><td>L</td><td>H</td><td>L</td></tr>
</table></td></tr>
<tr><td>11</td><td>IF-MUTE</td><td>O</td><td>To control internal counter.</td></tr>
<tr><td>12</td><td>IF-IN</td><td>I</td><td>General purpose counter input.</td></tr>
<tr><td>13</td><td>$\overline{\text{TUNE}}$</td><td>I</td><td>Receives "L" when station is tuned.</td></tr>
<tr><td>14</td><td>NC</td><td>–</td><td>Not connected.</td></tr>
<tr><td>15</td><td>AM-IN</td><td>I</td><td>Receives the AM local oscillator frequency signal.</td></tr>
<tr><td>16</td><td>FM-IN</td><td>I</td><td>Receives the FM local oscillator frequency signal.</td></tr>
<tr><td>17</td><td>VDD</td><td>–</td><td>Supply power to IC (+5V).</td></tr>
<tr><td>18</td><td>PD</td><td>O</td><td>PLL charge pump output.</td></tr>
<tr><td>19</td><td>A-IN</td><td>I</td><td rowspan="2">The MOS transistor used for PLL active low pass filter.</td></tr>
<tr><td>20</td><td>A-OUT</td><td>O</td></tr>
<tr><td>21</td><td>VSS</td><td>–</td><td>Ground.</td></tr>
</table>

ADJUSTMENT – 1 <TUNER / DECK>

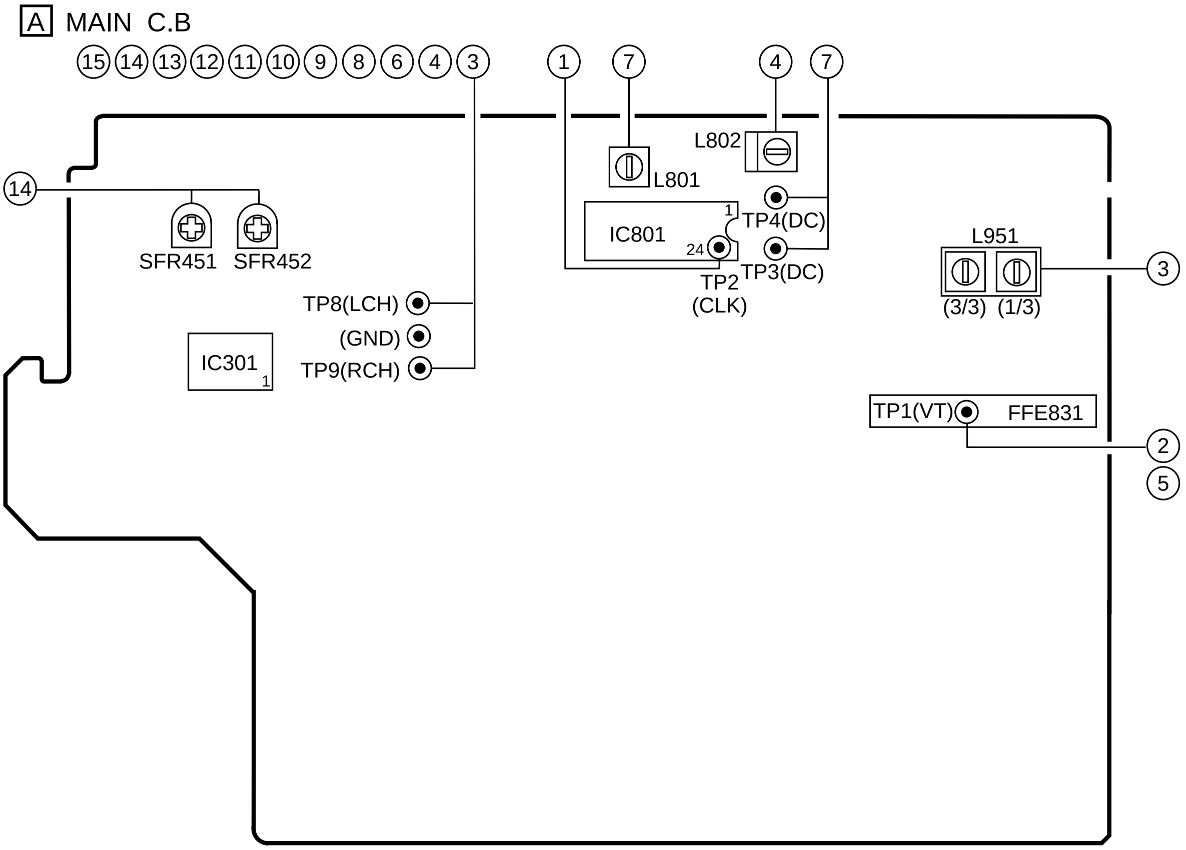

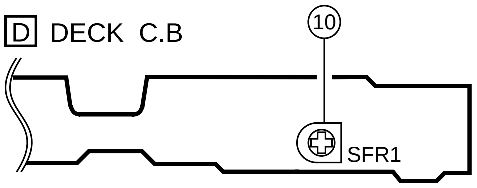

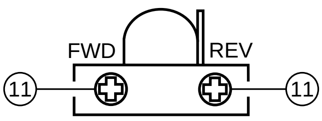

< TUNER SECTION >

1. Clock frequency Check
   Settings : • Test point : TP2 (CLK)
   Method : Set to AM 1710kHz <LH,U,HA>, AM 1602 kHz <HS> and check that the test point is 2160kHz ± 45Hz <LH,U,HA>, 2052kHz ± 45Hz <HS>.

2. AM VT Check
   Settings : • Test point : TP1 (VT)
   Method : Set to AM 1710kHz <LH,U,HA>, AM 1602 kHz <HS> and check that the test point is less than 8.5V <LH,U,HA>, less than 8.0V <HS>. Then set to AM 530kHz <LH,U,HA>, AM 531kHz <HS> and check that the test point is more than 0.6V.

3. AM Tracking Adjustment
   Settings : • Test point : TP8 (Lch), TP9 (Rch)
   • Adjustment location : L951(1/3)
   Method : Set to AM 1000kHz <LH,U,HA>, AM 999kHz <HS> and adjust L951(1/3) so that the test point becomes maximum.

4. AM IF Adjustment
   Settings : • Test point : TP8 (Lch), TP9 (Rch)
   • Adjustment location :
   L802 .... 450kHz

5. FM VT Check
   Settings : • Test point : TP1 (VT)
   Method : Set to FM 87.5MHz and check that the test point is more than 0.5V. Then set to FM 108.0MHz and check that the test point is less than 8.0V.

6. FM Tracking Check
   Settings : • Test point : TP8 (Lch), TP9 (Rch)
   Method : Set to FM 98.0MHz and check that the test point is less than 9dBµV.

7. DC Balance / Mono Distortion Adjustment
Settings : • Test point : TP3, TP4 (DC)
• Adjustment location : L801
• Input level : 60dBμV
Method : Set to FM 98.0MHz and adjust L801 to achieve minimum distortion. Then check that the voltage between TP3 and TP4 is within 0V ± 300mV.

8. Output Level Check
<AM>
Settings : • Test point : TP8 (Lch), TP9 (Rch)
• Input level : 74dBμV
Method : Set to AM 1000kHz <LH,U,HA>, AM 999kHz <HS> and check that the test point is 40mV ± 3dB.

<FM>
Settings : • Test point : TP8 (Lch), TP9 (Rch)
• Input level : 60dBμV
Method : Set to FM 98.0MHz and check that the test point is 140mV ± 3dB.

9. FM Separation Check
Settings : • Test point : TP8 (Lch), TP9 (Rch)
• Input level : 60dBμV
Method : Set to FM 98.0MHz and check that the test point is more than 25dB.

< DECK SECTION >

10. Tape Speed Adjustment (DECK 2)
Settings : • Test tape : TTA–100
• Test point : TP8 (Lch), TP9 (Rch)
• Adjustment location : SFR1
Method : Play back the 3kHz signal of the test tape and adjust SFR1 so that the test point becomes 3000Hz ± 5Hz (FWD) and FWD SPEED ± 45Hz (REV).

11. Head Azimuth Adjustment (DECK 1, DECK 2)
Settings : • Test tape : TTA–330
• Test point : TP8 (Lch), TP9 (Rch)
• Adjustment location : Head azimuth adjustment screw
Method : Play back (FWD) the 8kHz signal of the test tape and adjust screw so that the output becomes maximum. Next, perform on REV PLAY mode.

12. PB Frequency Response Check (DECK 1, DECK 2)
Settings : • Test tape : TTA–330
• Test point : TP8 (Lch), TP9 (Rch)
Method : Play back the 315Hz and 8kHz signals of the test tape and check that the output ratio of the 8kHz signal with respect to that of the 315Hz signal is 0dB ± 5dB.

13. PB Sensitivity Check (DECK 1, DECK 2)
Settings : • Test tape : TTA–200
• Test point : TP8 (Lch), TP9 (Rch)
Method : Play back the test tape and check that the output level of the test point is 110mV ± 3dB.

14. REC/PB Frequency Response Adjustment (DECK 2)
Settings : • Test tape : TTA–602
• Test point : TP8 (Lch), TP9 (Rch)
• Input signal : 1kHz / 8kHz (–20VU / –26dBV)
• Adjustment location : SFR451 (Lch) SFR452 (Rch)
Method : Apply a 1kHz signal and REC mode. Then adjust OSC attenuator so that the output level at the TP8, TP9 becomes 5.5mV ~ 9.5mV. Record and play back the 1kHz and 8kHz signals and adjust SFRs so that the output of the 8kHz signals becomes 0dB ± 0.5dB <LH,HA,HS>, –1.5dB ± 0.5dB <U> with respect to that of the 1kHz signal.

15. REC/PB Sensitivity Check (DECK 2)
Settings : • Test tape : TTA–602
• Test point : TP8 (Lch), TP9 (Rch)
• Input signal : 1kHz (0VU / –6dBV)
Method : Apply a 1kHz signal and REC mode. Then adjust OSC attenuator so that the output level at TP8, TP9 becomes 55mV ~ 95mV. Record and play back the 1kHz signals and check that the output is –1dB ± 3.5dB.

ADJUSTMENT – 2 <FRONT>

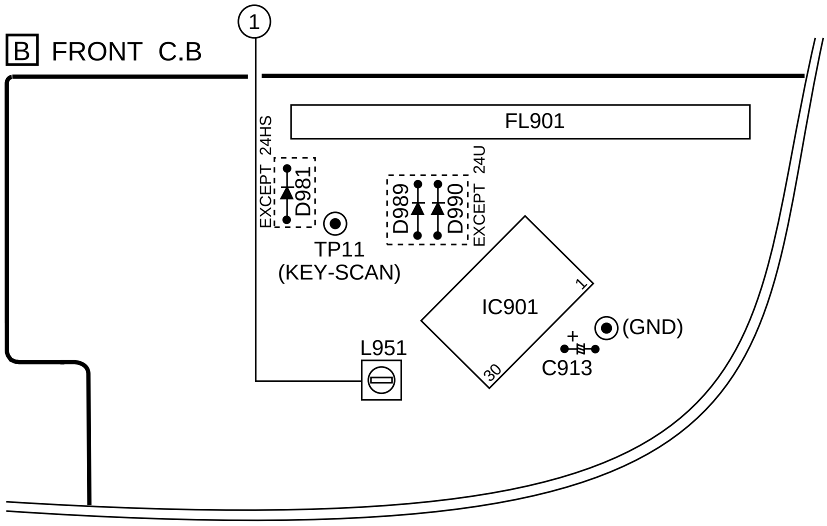

< FRONT SECTION >

1. μ-CON OSC Adjustment

Settings : • Test point : TP11 (KEY-SCAN), (GND)

• Adjustment location : L951

Method : Connect a frequency counter across TP11 and GND via a CR network filter as shown below.
Then adjust L951 so that the test point becomes 184.94Hz ± 0.18Hz.

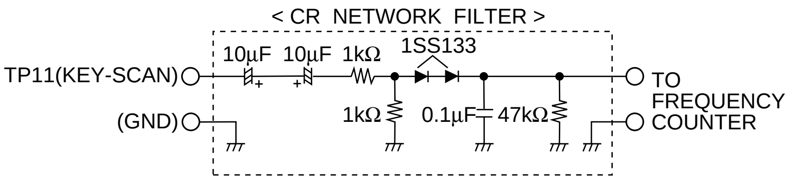

MECHANICAL EXPLODED VIEW 1 / 1 (NSX–AJ24) <U>, (NSX–BL24) <LH>

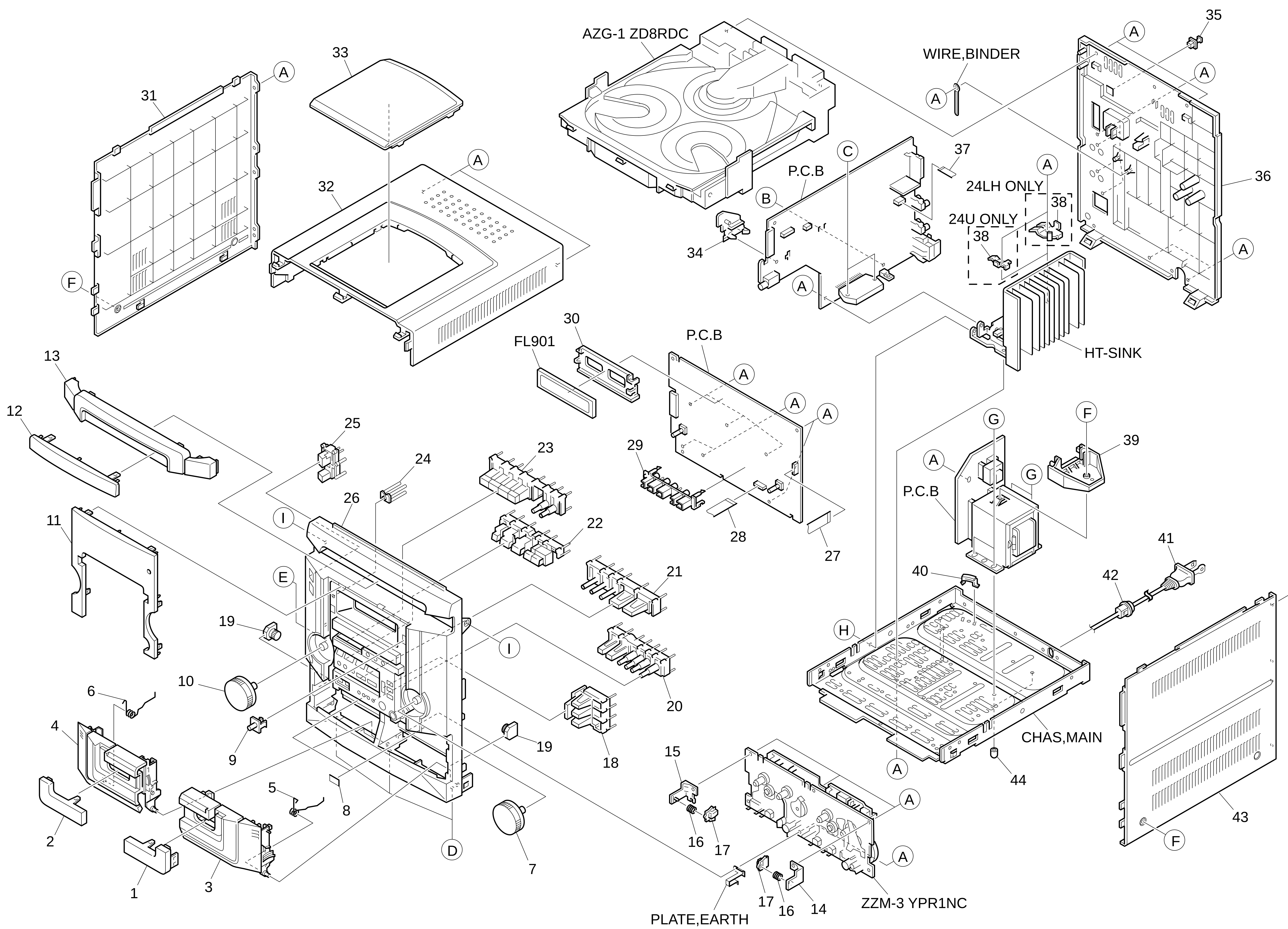

MECHANICAL PARTS LIST 1 / 1 (NSX–AJ24) <U>, (NSX–BL24) <LH>

REF. NO.	PART NO.	KANRI NO.	DESCRIPTION
1	8A-NF0-007-010		WINDOW,CASS 2
2	8A-NF0-006-010		WINDOW,CASS 1
3	8A-NF0-004-010		BOX,CASS 2
4	8A-NF0-003-010		BOX,CASS 1
5	8A-NF8-208-010		SPR-T,EJECT 2
6	8A-NF8-207-010		SPR-T,EJECT 1
7	8A-NF0-016-010		KNOB,RTRY JOG
8	81-532-080-010		LABEL, CASS. COMPT
9	8A-NF0-056-010		LENS,REMOCON
10	8A-NF0-016-010		KNOB,RTRY VOL
11	8A-NF0-005-010		WINDOW,DISP U
12	8A-NF0-038-010		WINDOW,CD
13	8A-NF0-014-010		PANEL,TRAY
14	87-NF4-217-110		HLDR,LOCK 2
15	87-NF4-216-010		HLDR,LOCK 1
16	86-NF9-224-010		SPR-C,LOCK
17	82-NF5-229-010		PLATE,LOCK
18	8A-NF0-025-010		KEY,ENTER
19	8A-NF8-209-010		OIL-DMPR,120
20	8A-NF0-018-010		KEY,SYNC
21	8A-NF0-019-010		KEY,CD
22	8A-NF0-010-010		KEY,ASSY OPE 1 WAY
23	8A-NF0-009-010		KEY,FUN
24	8A-NF0-021-010		REFLECTOR,ECO
25	8A-NF0-008-010		KEY,POWER
26	8A-NF0-026-010		CABI,FR LH 24<24LHSC>
26	8A-NF0-001-010		CABI,FR U<24USC>
27	88-913-301-110		FF-CABLE,13P-1.25
28	88-911-101-110		FF-CABLE,11P 1.25
29	8A-NF0-201-010		GUIDE,OPE 1 WAY
30	82-NF7-210-110		GUIDE,FL(*)
31	8A-NF8-007-010		PANEL,LEFT V-2
32	8A-NF8-005-010		PANEL,TOP
33	8A-NF8-006-010		WINDOW,TOP
34	8A-NF8-206-010		HLDR,PWB M
35	84-ZG1-245-210		CAP,OPTICAL
36	8A-NF0-062-010		CABI,REAR LHSC 24<24LHSC>
36	8A-NF0-061-010		CABI,REAR USC<24USC>
37	88-906-251-110		FF-CABLE,6P 1.25
38	8A-NF8-205-010		HLDR,IC<24LHSC>
38	86-NF6-211-010		HLDR,IC T1.6<24USC>
39	8A-NF9-211-010		HLDR,PWB PT HI
40	87-NF4-221-010		HLDR,CABLE
⚠ 41	87-A80-092-010		AC CORD ASSY,E BLK SUN FAI<24LHSC>
⚠ 41	87-A80-110-010		AC CORD ASSY,U SPT-2W<24USC>
42	87-085-185-010		BUSHING, AC CORD (E)<24LHSC>
42	87-A91-422-010		BUSHING,AC CORD(U)<24USC>
43	8A-NF8-008-010		PANEL,RIGHT V-2
44	8Z-NB8-240-010		COVER, PL
A	87-067-703-010		TAPPING SCREW, BVT2+3-10
B	87-NF4-224-010		S-SCREW,IT3B+3-8 CU
C	87-067-581-010		TAPPING SCREW, BVT2+3-15
D	87-067-689-010		TAPPING SCREW, BVTT+3-8
E	87-723-096-410		QT2+3-10W/O SLOT BL
F	87-067-641-010		UTT2+3-8(W/O SLOT)BL
G	87-078-191-010		S-SCREW,IT+4-10
H	87-721-096-410		QT2+3-10 GLD
I	87-721-097-410		QT2+3-12 GLD

COLOR NAME TABLE

Basic color symbol	Color	Basic color symbol	Color	Basic color symbol	Color
B	Black	C	Cream	D	Orange
G	Green	H	Gray	L	Blue
LT	Transparent Blue	N	Gold	P	Pink
R	Red	S	Silver	ST	Titan Silver
T	Brown	V	Violet	W	White
WT	Transparent White	Y	Yellow	YT	Transparent Yellow
LM	Metallic Blue	LL	Light Blue	GT	Transparent Green
LD	Dark Blue	DT	Transparent Orange	GM	Metallic Green
YM	Metallic Yellow	DM	Metallic Orange		

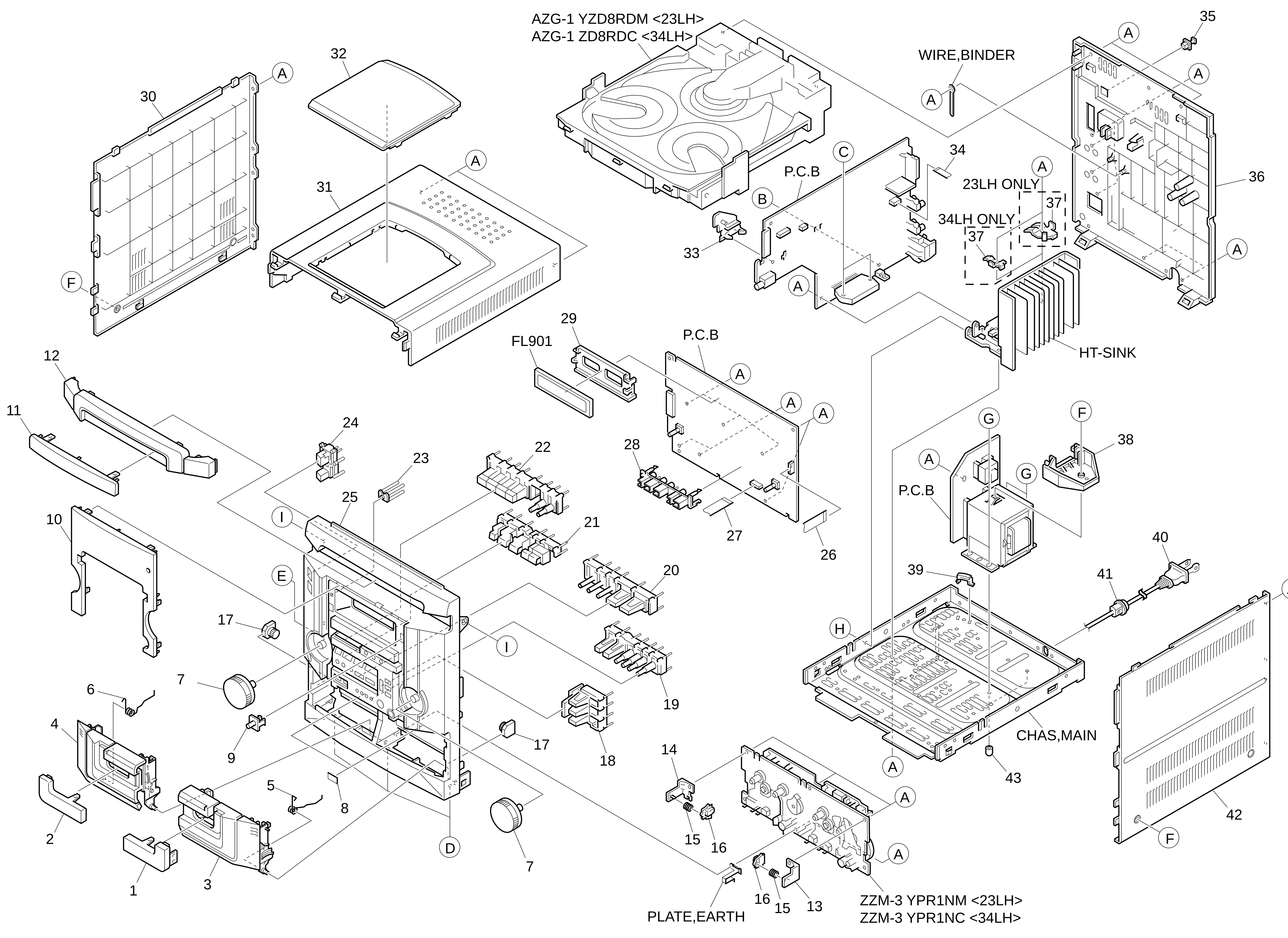
AZG-1 YZD8RDM <23LH>
AZG-1 ZD8RDC <34LH>
WIRE,BINDER
P.C.B
23LH ONLY
34LH ONLY
FL901
HT-SINK
CHAS,MAIN
PLATE,EARTH
ZZM-3 YPR1NM <23LH>
ZZM-3 YPR1NC <34LH>
1
2
3
4
5
6
7
8
9
10
11
12
13
14
15
16
17
18
19
20
21
22
23
24
25
26
27
28
29
30
31
32
33
34
35
36
37
38
39
40
41
42
43
A
B
C
D
E
F
G
H
I

MECHANICAL PARTS LIST 1 / 1 (NSX–BL23 / BL34) <LH>

REF. NO.	PART NO.	KANRI NO.	DESCRIPTION
1	8A-NF0-007-010		WINDOW,CASS 2
2	8A-NF0-006-010		WINDOW,CASS 1
3	8A-NF0-004-010		BOX,CASS 2
4	8A-NF0-003-010		BOX,CASS 1
5	8A-NF8-208-010		SPR-T,EJECT 2
6	8A-NF8-207-010		SPR-T,EJECT 1
7	8A-NF0-016-010		KNOB,RTRY VOL
8	81-532-080-010		LABEL, CASS. COMPT
9	8A-NF0-056-010		LENS,REMOCON
10	8A-NF0-005-010		WINDOW,DISP U
11	8A-NF0-038-010		WINDOW,CD
12	8A-NF0-014-010		PANEL,TRAY
13	87-NF4-217-110		HLDR,LOCK 2
14	87-NF4-216-010		HLDR,LOCK 1
15	86-NF9-224-010		SPR-C,LOCK
16	82-NF5-229-010		PLATE,LOCK
17	8A-NF8-209-010		OIL-DMPR,120
18	8A-NF0-025-010		KEY,ENTER
19	8A-NF0-018-010		KEY,SYNC
20	8A-NF0-019-010		KEY,CD
21	8A-NF0-010-010		KEY,ASSY OPE 1 WAY
22	8A-NF0-009-010		KEY,FUN
23	8A-NF0-021-010		REFLECTOR,ECO
24	8A-NF0-008-010		KEY,POWER
25	8A-NF0-027-010		CABI,FR LH 34<34LHSC>
25	8A-NF0-040-010		CABI,FR LHSC3M 24J<23LHSC3M>
26	88-913-301-110		FF-CABLE,13P-1.25
27	88-911-101-110		FF-CABLE,11P 1.25
28	8A-NF9-201-010		GUIDE,OPE 1 WAY
29	82-NF7-210-110		GUIDE,FL(*)
30	8A-NF8-007-010		PANEL,LEFT V-2
31	8A-NF8-005-010		PANEL,TOP
32	8A-NF8-006-010		WINDOW,TOP
33	8A-NF8-206-010		HLDR,PWB M
34	88-906-251-110		FF-CABLE,6P 1.25
35	84-ZG1-245-210		CAP,OPTICAL
36	8A-NFX-005-010		CABI,REAR LH W/O SPEC<23LHSC3M>
36	8A-NF0-063-010		CABI,REAR LHSC 34<34LHSC>
37	8A-NF8-205-010		HLDR,IC<23LHSC3M>
37	86-NF6-211-010		HLDR,IC T1.6<34LHSC>
38	8A-NF9-211-010		HLDR,PWB PT HI
39	87-NF4-221-010		HLDR,CABLE
⚠ 40	87-A80-157-010		AC CORD ASSY,E BLK CC
41	87-085-185-010		BUSHING, AC CORD(E)
42	8A-NF8-008-010		PANEL,RIGHT V-2
43	8Z-NB8-240-010		COVER, PL
A	87-067-703-010		TAPPING SCREW, BVT2+3-10
B	87-NF4-224-010		S-SCREW,IT3B+3-8 CU
C	87-067-581-010		TAPPING SCREW, BVT2+3-15
D	87-067-689-010		TAPPING SCREW, BVTT+3-8
E	87-723-096-410		QT2+3-10W/O SLOT BL
F	87-067-641-010		UTT2+3-8(W/O SLOT)BL
G	87-078-191-010		S-SCREW,IT+4-10
H	87-721-096-410		QT2+3-10 GLD
I	87-721-097-410		QT2+3-12 GLD

COLOR NAME TABLE

Basic color symbol	Color	Basic color symbol	Color	Basic color symbol	Color
B	Black	C	Cream	D	Orange
G	Green	H	Gray	L	Blue
LT	Transparent Blue	N	Gold	P	Pink
R	Red	S	Silver	ST	Titan Silver
T	Brown	V	Violet	W	White
WT	Transparent White	Y	Yellow	YT	Transparent Yellow
LM	Metallic Blue	LL	Light Blue	GT	Transparent Green
LD	Dark Blue	DT	Transparent Orange	GM	Metallic Green
YM	Metallic Yellow	DM	Metallic Orange		

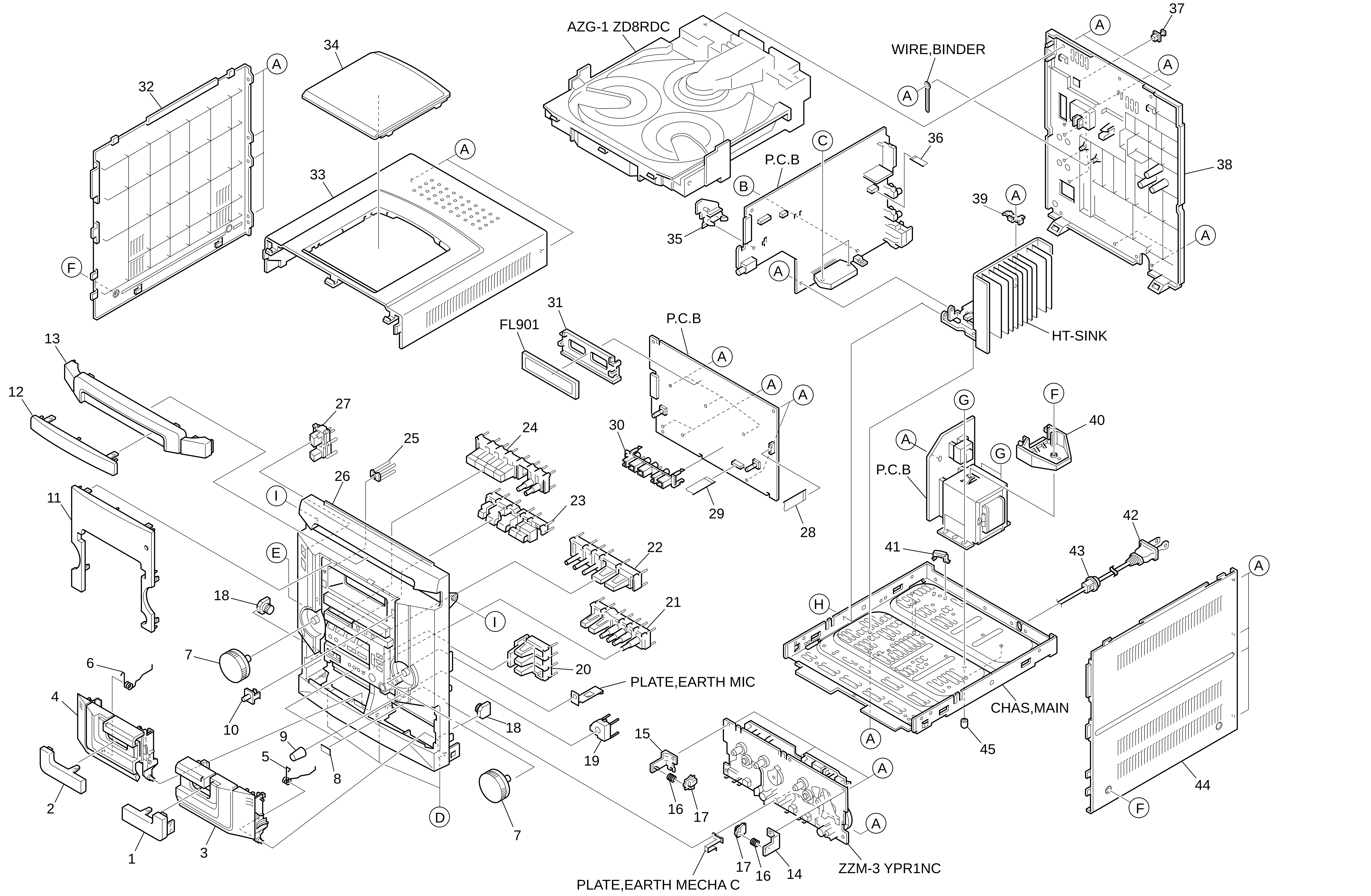
AZG-1 ZD8RDC
WIRE,BINDER
P.C.B
FL901
HT-SINK
PLATE,EARTH MIC
CHAS,MAIN
PLATE,EARTH MECHA C
ZZM-3 YPR1NC
1
2
3
4
5
6
7
8
9
10
11
12
13
14
15
16
17
18
19
20
21
22
23
24
25
26
27
28
29
30
31
32
33
34
35
36
37
38
39
40
41
42
43
44
45
A
B
C
D
E
F
G
H
I

MECHANICAL PARTS LIST 1 / 1 (NSX–BL24) <HS>

REF. NO.	PART NO.	KANRI NO.	DESCRIPTION
1	8A-NF0-007-010		WINDOW,CASS 2
2	8A-NF0-006-010		WINDOW,CASS 1
3	8A-NF0-004-010		BOX,CASS 2
4	8A-NF0-003-010		BOX,CASS 1
5	8A-NF8-208-010		SPR-T,EJECT 2
6	8A-NF8-207-010		SPR-T,EJECT 1
7	8A-NF0-016-010		KNOB,RTRY VOL
8	81-532-080-010		LABEL, CASS. COMPT
9	8A-NF9-015-010		KNOB,RTRY MIC
10	8A-NF0-056-010		LENS,REMOCON
11	8A-NF0-005-010		WINDOW,DISP U
12	8A-NF0-038-010		WINDOW,CD
13	8A-NF0-014-010		PANEL,TRAY
14	87-NF4-217-110		HLDR,LOCK 2
15	87-NF4-216-010		HLDR,LOCK 1
16	86-NF9-224-010		SPR-C,LOCK
17	82-NF5-229-010		PLATE,LOCK
18	8A-NF8-209-010		OIL-DMPR,120
19	8A-NF9-021-010		PLATE,MIC
20	8A-NF0-025-010		KEY,ENTER
21	8A-NF0-018-010		KEY,SYNC
22	8A-NF0-019-010		KEY,CD
23	8A-NF0-010-010		KEY,ASSY OPE 1 WAY
24	8A-NF0-009-010		KEY,FUN
25	8A-NF0-021-010		REFLECTOR,ECO
26	8A-NF0-032-010		CABI,FR HS
27	8A-NF0-008-010		KEY,POWER
28	88-913-301-110		FF-CABLE,13P-1.25
29	88-911-101-110		FF-CABLE,11P 1.25
30	8A-NF9-201-010		GUIDE,OPE 1 WAY
31	82-NF7-210-110		GUIDE,FL(*)
32	8A-NF8-007-010		PANEL,LEFT V-2
33	8A-NF8-005-010		PANEL,TOP
34	8A-NF8-006-010		WINDOW,TOP
35	8A-NF8-206-010		HLDR,PWB M
36	88-906-251-110		FF-CABLE,6P 1.25
37	84-ZG1-245-210		CAP,OPTICAL
38	8A-NF0-070-010		CABI,REAR HS
39	8A-NF8-216-010		HLDR,IC C
40	8A-NF9-211-010		HLDR,PWB PT HI
41	87-NF4-221-010		HLDR,CABLE
⚠ 42	87-A80-155-010		AC CORD ASSY,HS TS
43	87-085-185-010		BUSHING, AC CORD(E)
44	8A-NF8-008-010		PANEL,RIGHT V-2
45	8Z-NB8-240-010		COVER, PL
A	87-067-703-010		TAPPING SCREW, BVT2+3-10
B	87-NF4-224-010		S-SCREW,IT3B+3-8 CU
C	87-067-581-010		TAPPING SCREW, BVT2+3-15
D	87-067-689-010		TAPPING SCREW, BVTT+3-8
E	87-723-096-410		QT2+3-10W/O SLOT BL
F	87-067-641-010		UTT2+3-8(W/O SLOT)BL
G	87-078-191-010		S-SCREW,IT+4-10
H	87-721-096-410		QT2+3-10 GLD
I	87-721-097-410		QT2+3-12 GLD

COLOR NAME TABLE

Basic color symbol	Color	Basic color symbol	Color	Basic color symbol	Color
B	Black	C	Cream	D	Orange
G	Green	H	Gray	L	Blue
LT	Transparent Blue	N	Gold	P	Pink
R	Red	S	Silver	ST	Titan Silver
T	Brown	V	Violet	W	White
WT	Transparent White	Y	Yellow	YT	Transparent Yellow
LM	Metallic Blue	LL	Light Blue	GT	Transparent Green
LD	Dark Blue	DT	Transparent Orange	GM	Metallic Green
YM	Metallic Yellow	DM	Metallic Orange		

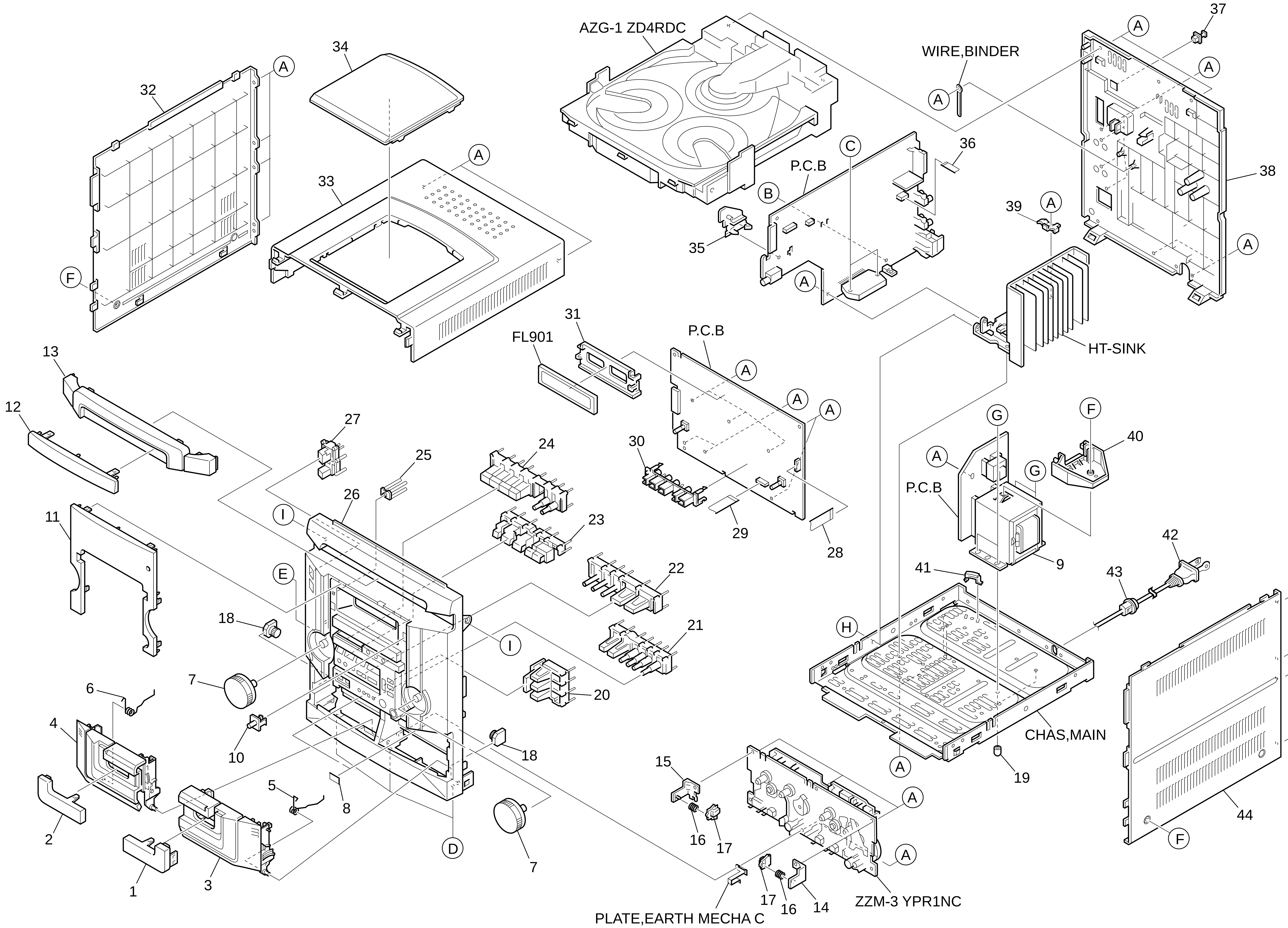
AZG-1 ZD4RDC
WIRE,BINDER
P.C.B
HT-SINK
FL901
P.C.B
P.C.B
CHAS,MAIN
PLATE,EARTH MECHA C
ZZM-3 YPR1NC
A
B
C
D
E
F
G
H
I
1
2
3
4
5
6
7
8
9
10
11
12
13
14
15
16
17
18
19
20
21
22
23
24
25
26
27
28
29
30
31
32
33
34
35
36
37
38
39
40
41
42
43
44

MECHANICAL PARTS LIST 1 / 1 (NSX–BL24E / BL34E) <HA>

REF. NO.	PART NO.	KANRI NO.	DESCRIPTION
1	8A-NF0-007-010		WINDOW,CASS 2
2	8A-NF0-006-010		WINDOW,CASS 1
3	8A-NF0-004-010		BOX,CASS 2
4	8A-NF0-003-010		BOX,CASS 1
5	8A-NF8-208-010		SPR-T,EJECT 2
6	8A-NF8-207-010		SPR-T,EJECT 1
7	8A-NF0-016-010		KNOB,RTRY VOL
8	81-532-080-010		LABEL, CASS. COMPT
⚠ 9	8A-NF9-614-010		PT,ANF-9 HR-HI<24EHASC>
⚠ 9	8A-NF9-616-010		PT,ANF-9 LH-HI<34EHASC>
10	8A-NF0-056-010		LENS,REMOCON
11	8A-NF0-005-010		WINDOW,DISP U
12	8A-NF0-038-010		WINDOW,CD
13	8A-NF0-014-010		PANEL,TRAY
14	87-NF4-217-110		HLDR,LOCK 2
15	87-NF4-216-010		HLDR,LOCK 1
16	86-NF9-224-010		SPR-C,LOCK
17	82-NF5-229-010		PLATE,LOCK
18	8A-NF8-209-010		OIL-DMPR,120
19	8Z-NB8-240-010		COVER, PL
20	8A-NF0-025-010		KEY,ENTER
21	8A-NF0-018-010		KEY,SYNC
22	8A-NF0-019-010		KEY,CD
23	8A-NF0-010-010		KEY,ASSY OPE 1 WAY
24	8A-NF0-009-010		KEY,FUN
25	8A-NF0-021-010		REFLECTOR,ECO
26	8A-NF0-039-010		CABI,FR HASC1M 24E<24EHASC>
26	8A-NF0-033-010		CABI,FR HASC2M 34E<34EHASC>
27	8A-NF0-008-010		KEY,POWER
28	88-913-301-110		FF-CABLE,13P-1.25
29	88-911-101-110		FF-CABLE,11P 1.25
30	8A-NF0-201-010		GUIDE,OPE 1 WAY
31	82-NF7-210-110		GUIDE,FL(*)
32	8A-NF8-007-010		PANEL,LEFT V-2
33	8A-NF8-005-010		PANEL,TOP
34	8A-NF8-006-010		WINDOW,TOP
35	8A-NF8-206-010		HLDR,PWB M
36	88-906-251-110		FF-CABLE,6P 1.25
37	84-ZG1-245-210		CAP,OPTICAL
38	8A-NFX-005-110		CABI,REAR LH W/O SPEC
39	8A-NF8-216-010		HLDR,IC C<24EHASC>
39	86-NF6-211-010		HLDR,IC T1.6<34EHASC>
40	8A-NF9-211-010		HLDR,PWB PT HI
41	87-NF4-221-010		HLDR,CABLE
⚠ 42	87-A80-105-010		AC CORD ASSY,AZ
43	87-085-185-010		BUSHING, AC CORD(E)
44	8A-NF8-008-010		PANEL,RIGHT V-2
A	87-067-703-010		TAPPING SCREW, BVT2+3-10
B	87-NF4-224-010		S-SCREW,IT3B+3-8 CU
C	87-067-581-010		TAPPING SCREW, BVT2+3-15
D	87-067-689-010		TAPPING SCREW, BVTT+3-8
E	87-723-096-410		QT2+3-10W/O SLOT BL
F	87-067-641-010		UTT2+3-8(W/O SLOT)BL
G	87-078-191-010		S-SCREW,IT+4-10
H	87-721-096-410		QT2+3-10 GLD
I	87-721-097-410		QT2+3-12 GLD

COLOR NAME TABLE

Basic color symbol	Color	Basic color symbol	Color	Basic color symbol	Color
B	Black	C	Cream	D	Orange
G	Green	H	Gray	L	Blue
LT	Transparent Blue	N	Gold	P	Pink
R	Red	S	Silver	ST	Titan Silver
T	Brown	V	Violet	W	White
WT	Transparent White	Y	Yellow	YT	Transparent Yellow
LM	Metallic Blue	LL	Light Blue	GT	Transparent Green
LD	Dark Blue	DT	Transparent Orange	GM	Metallic Green
YM	Metallic Yellow	DM	Metallic Orange		

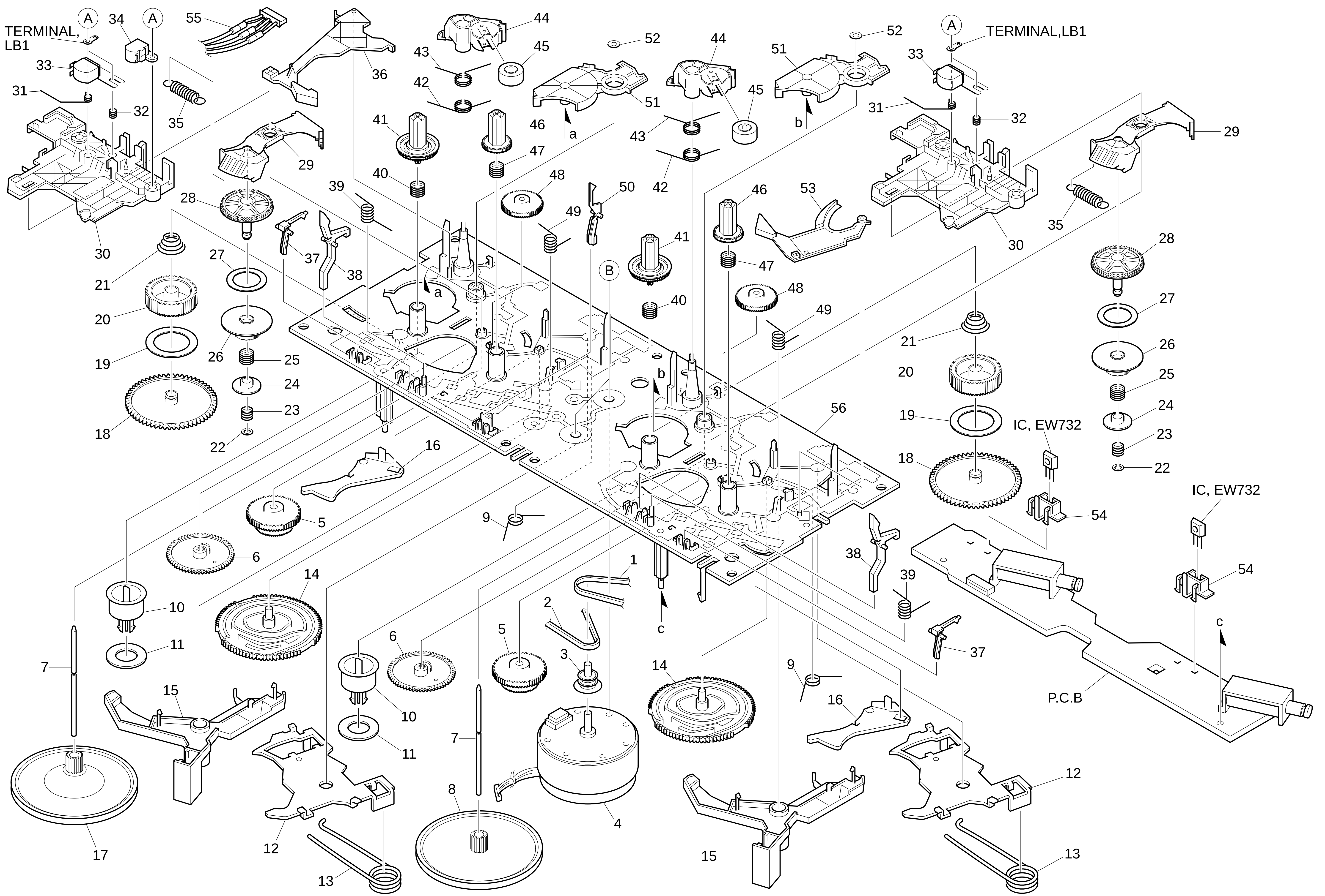

TERMINAL, LB1
A
34
A
55
44
43
45
52
44
51
52
A
TERMINAL,LB1
33
31
32
35
36
42
41
46
47
40
51
a
43
45
b
33
31
32
29
29
28
30
39
48
49
50
42
46
53
41
47
35
30
28
21
27
37
38
a
B
48
40
49
27
20
26
25
24
19
18
23
22
21
20
26
25
24
b
56
19
IC, EW732
23
22
18
16
5
6
9
54
IC, EW732
38
39
54
14
10
11
1
2
3
c
37
c
7
15
6
5
14
9
16
10
11
P.C.B
7
8
4
12
12
17
13
15
13

TAPE MECHANISM PARTS LIST 1 / 1

REF. NO.	PART NO.	KANRI NO.	DESCRIPTION
1	8Z-ZM3-227-010		BELT,MAIN M3
2	8Z-ZM3-235-010		BELT,MAIN L
3	8Z-ZM1-235-010		PULLEY,MOT
4	87-045-347-010		MOT,SHU2L 70
5	8Z-ZM1-232-010		GEAR,IDL FF/REW
6	8Z-ZM3-244-010		GEAR,CAM TD20
7	8Z-ZM3-242-010		SHAFT,CAP M3
8	8Z-ZM3-228-010		FLY-WHL,M3
9	8Z-ZM3-231-010		SPR-T,TRIG
10	8Z-ZM3-213-010		CLR,MG
11	82-ZM3-616-010		RING MAGNET 4
12	8Z-ZM3-243-010		LEVER ASSY,HD UP
13	8Z-ZM3-238-010		SPR-T,HD UP
14	8Z-ZM3-219-010		GEAR,CAM M3
15	8Z-ZM3-206-010		LEVER,TRIG
16	8Z-ZM3-209-010		LEVER,CAM FR
17	8Z-ZM2-211-010		FLY-WHL,ZZM-2
18	8Z-ZM1-228-010		GEAR,SLIP T-UP B
19	8Z-ZM1-265-010		FELT,T-UP
20	8Z-ZM1-227-010		GEAR,SLIP T-UP A
21	8Z-ZM1-251-110		SPR-C,T-UP SLIP
22	8Z-ZM1-275-010		W-L,1,47-4-0.25
23	8Z-ZM1-257-010		SPR-C,F/R
24	8Z-ZM1-236-010		CLR,SLIP FF/REW
25	8Z-ZM3-226-010		SPR-C,FR M3
26	8Z-ZM3-250-010		GEAR,SLIP F/R A M3
27	8Z-ZM1-269-010		FELT,FF/REW 2
28	8Z-ZM1-238-110		GEAR,SLIP FF/REW B 2
29	8Z-ZM3-220-010		LEVER,FR M3
30	8Z-ZM3-205-010		LEVER,PLAY M3
31	8Z-ZM3-233-010		SPR-T,BRG M3
32	84-ZM2-227-310		SPR-C,AZIMUTH
33	87-A90-403-110		HEAD,RPH MS15R
34	87-A90-404-010		HEAD,EH LE15B
35	8Z-ZM3-239-010		SPR-E,FR
36	8Z-ZM3-211-010		LEVER,EJECT R
37	8Z-ZM3-225-010		LEVER,STOP
38	8Z-ZM3-221-010		LEVER,CAS
39	8Z-ZM3-234-010		SPR-T,LVR CAS
40	8Z-ZM3-223-010		SPR-C,REEL R M3
41	8Z-ZM1-225-110		GEAR,REEL R
42	8Z-ZM3-240-010		SPR-T,T-UP M3
43	8Z-ZM3-237-010		SPR-T,PINCH M3
44	8Z-ZM3-215-010		LEVER,PINCH M3
45	8Z-ZM1-261-110		ROLLER ASSY,PINCH
46	8Z-ZM1-226-010		GEAR,REEL L
47	8Z-ZM3-222-010		SPR-C,REEL L M3
48	8Z-ZM3-251-010		GEAR,IDL REW M3
49	8Z-ZM3-236-010		SPR-T,PLAY M3
50	82-ZM1-240-110		LVR,REC(*)
51	8Z-ZM3-216-010		LEVER,T-UP M3
52	87-B10-301-010		W-L,1.63-3.2-05 SLIT
53	8Z-ZM3-212-010		LEVER,EJECT L
54	8Z-ZM3-214-010		HLDR,IC
55	86-ZM3-605-110		CONN ASSY,8P -RPB
56	8Z-ZM3-203-010		CHAS ASSY,M3
A	84-ZM2-242-010		S-SCREW,AZ1-2-6.4
B	8Z-ZM2-220-110		V+2.6 ZZM-2

SPEAKER DISASSEMBLY INSTRUCTIONS

Type.1

Insert a flat-bladed screwdriver into the position indicated by the arrows and remove the panel. Remove the screws of each speaker unit and then remove the speaker units.

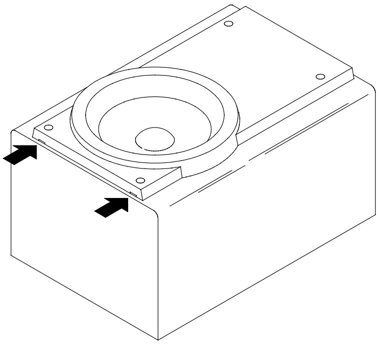

Type.2

Remove the grill frame and four pieces of rubber caps by pulling out with a flat-bladed screwdriver. Remove the screws from hole where installed rubber caps. Insert a flat-bladed screwdriver into the position indicated by the arrows and remove the panel. Remove the screws of each speaker unit and then remove the speaker units.

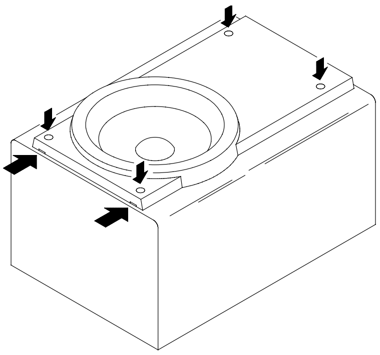

Type.3

Insert a flat-bladed screwdriver into the position indicated by the arrows and remove the panel. Turn the speaker unit to counter-clockwise direction while inserting a flat-bladed screwdriver into one of the hollows around speaker unit, and then remove the speaker unit. After replacing the speaker unit, install it turning to clockwise direction until "click" sound comes out.

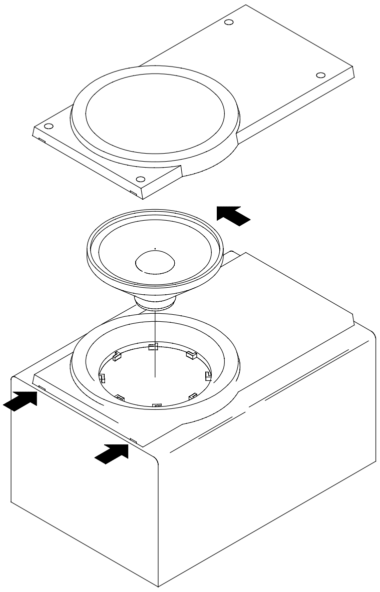

Type.4

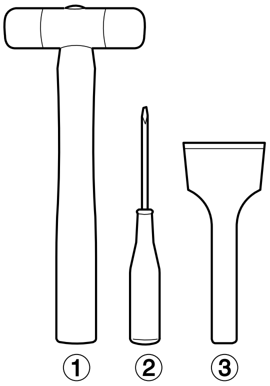

TOOLS

① Plastic head hammer
② (⊖) flat head screwdriver
③ Cut chisel

How to Remove the PANEL, FR

1. Insert the (⊖) flat head screwdriver tip into the gap between the PANEL, FR and the PANEL, SPKR. Tap the head of the (⊖) flat head screwdriver with the plastic hammer head, and create the clearance as shown in Fig-1.

2. Insert the cut chisel in the clearance, and tap the head of the cut chisel with plastic hammer as shown in Fig-2, to remove the PANEL, FR.

3. Place the speaker horizontally. Tap head of the cut chisel with plastic hammer as shown in Fig-3, and remove the PANEL, FR completely.

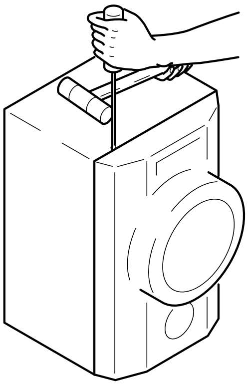

Fig-1

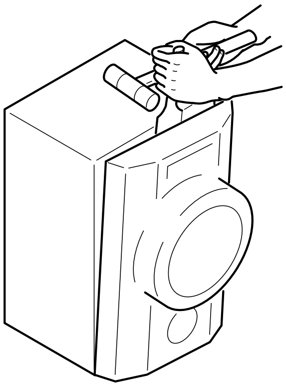

Fig-2

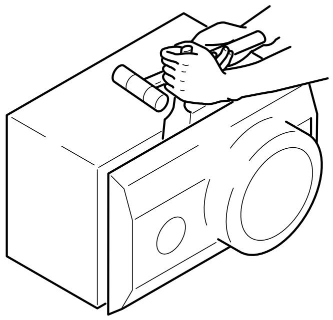

Fig-3

How to Attach the PANEL, FR

Attach the PANEL, FR to the PANEL, SPKR. Tap the four corners of the PANEL, FR with the plastic hammer to fit the PANEL, FR into the PANEL, SPKR completely.

SPEAKER PARTS LIST
(SX–NAJ25) <YUSL, YUSC9>
(SX–NBL25) <Y1SL, YLSL, YLSC9, YLSC3M, YUSC9>

REF. NO.	PART NO.	KANRI NO.	DESCRIPTION
1	8A-NSA-001-010		PANEL,FR
2	8A-NSA-003-010		GRILLE,FRAME ASSY
3	8A-NSK-602-010		SPKR,W 140
4	8A-NSK-606-010		SPKR,T 60
5	87-NSH-612-010		SPKR,CERAMIC ASSY
6	87-NS7-611-010		CORD,SPKR
7	8A-NSA-014-010		PANEL,DUCT
8	8Z-NSY-003-010		CORD,BUSH<YLSC3M>

SPEAKER PARTS LIST
(SX–NBL42) <YLSL>

REF. NO.	PART NO.	KANRI NO.	DESCRIPTION
1	8A-NSX-001-010		PANEL,FR
2	8A-NSX-003-010		GRILLE,FRAME ASSY
3	8A-NSJ-602-010		SPKR,W 130
4	88-NS5-605-010		SPKR,T 60
5	87-NSH-612-010		SPKR,CERAMIC ASSY
6	87-NS7-611-010		CORD,SPKR

SPEAKER PARTS LIST
(SX–R140) <YUSC>

REF. NO.	PART NO.	KANRI NO.	DESCRIPTION
1	8A-YS4-001-010		GRILLE,FRAME ASSY
2	8A-YS4-601-010		SPKR,80
3	8A-YS4-610-010		CORD,SPKR 3.5
4	87-NS7-611-010		SPKR,CORD
5	87-010-384-010		CAP,E 100-25 SME

ACCESSORIES / PACKAGE LIST

REF. NO.	PART NO.	KANRI NO.	DESCRIPTION
1	8A-NF0-902-010		IB,LH(ESP)FM-BL24/BL34<24LH,34LH,24EHA,34EHA>
1	8A-NF0-903-010		IB,U(ESF)FM-AJ24<24U>
1	8A-NF0-922-010		IB,LH(P)CCE-BL24J<23LH>
2	87-006-225-010		ANT,LOOP ANT NC2<23LH>
2	87-A90-030-010		ANT,LOOP AM-NC C<EXCEPT 23LH>
3	87-043-115-010		FEEDER-ANT,FM
⚠ 4	87-A91-017-010		PLUG,CONVERSION JT-0476<24LH,34LH>
5	8Z-NF9-701-210		RC UNIT,ZAS02<23LH>
5	8Z-NF9-702-010		RC UNIT,ZAS02<EXCEPT 23LH>

アイワ株式会社 〒110-8710 東京都台東区池之端1-2-11 ☎03(3827)3111 （代表）
AIWA CO.,LTD. 2–11, IKENOHATA 1–CHOME, TAITO-KU, TOKYO 110, JAPAN TEL:03 (3827) 3111
9420025 0251431 Printed in Singapore